TM 5-1940-221-20P

TECHNICAL MANUAL

RETURN TO GOV. DOCS. FILE

ORGANIZATIONAL MAINTENACE REPAIR PARTS AND SPECIAL TOOLS LIST
BOAT, BRIDGE ERECTION, INBOARD DIESEL ENGINE, ALUMINUM HULL, 27 FT LG
ALUMINUM COMPANY OF AMERICA MODEL HICE-27D
NSN 1940-00-417-0526
HIGHWAY PRODUCTS MODEL HP1-27C MODDED
HIGHWAY PRODUCTS MODEL HP1-27B MODDED
MARINETTE MARINE CORP. MODEL A27 MODDED

This copy is a reprint which includes current pages from Changes 1 through 4.

This manual supersedes TM 5-1940-221-20P, 16 November 1979, including all changes.

HEADQUARTERS, DEPARTMENT OF THE ARMY

22 OCTOBER 1982

CHANGE NO. 4

HEADQUARTERS
DEPARTMENT OF THE ARMY
WASHINGTON, D.C.,11 April 1988

Organizational Maintenance Repair Parts and Special Tools List

BOAT, BRIDGE ERECTION, INBOARD DIESEL ENGINE,
ALUMINUM HULL, 27 FT LG
ALUMINUM COMPANY OF AMERICA MODEL HICE-27D
NSN 1940-00-417-0526
HIGHWAY PRODUCTS MODEL HPI-27C MODDED
HIGHWAY PRODUCTS MODEL HPI-27B MODDED
MARINETTE MARINE CORP. MODEL A27 MODDED

TM 5-1940-221-20P, 22 October 1982, is changed as follows:

1. Remove and insert pages as indicated below. New or changed text material is indicated by a vertical bar in the margin. An illustration change is indicated by a miniature pointing hand.

Remove pages	Insert pages
9 and 10	9 and 10

2. Retain this sheet in front of manual for reference purposes.

By Order of the Secretary of the Army:

CARL E. VUONO
General, United States Army
Chief of Staff

Official:

R. L. DILWORTH
Brigadier General, United States Army
The Adjutant General

DISTRIBUTION:
To be distributed in accordance with DA Form 12-25A, Unit Maintenance requirements for Boat, Bridge Erection, Inboard Diesel Engine, 27 Ft, (HPI-27A, 27B, 27C, 27D).

CHANGE No. 3

HEADQUARTERS
DEPARTMENT OF THE ARMY
WASHINGTON, D.C., 21 October 1987

Organizational Maintenance Repair Parts and Special Tools List

BOAT, BRIDGE ERECTION, INBOARD DIESEL ENGINE,
ALUMINUM HULL, 27 FT LG
ALUMINUM COMPANY OF AMERICA MODEL HICE-27D
NSN 1940-00-417-0526
HIGHWAY PRODUCTS MODEL HPI-27C MODDED
HIGHWAY PRODUCTS MODEL HPI-27B MODDED
MARINETTE MARINE CORP. MODEL A27 MODDED

TM 5-1940-221-20P, 22 October 1982, is changed as follows:

1. Remove and insert pages as indicated below. New or changed text material is indicated by a vertical bar in the margin. An illustration change is indicated by a miniature pointing hand.

Remove pages	Insert pages
20 through 22	20 through 22
121 through 124	121 through 124
127 and 128	127 and 128

2. Retain this sheet in front of manual for reference purposes.

By Order of the Secretary of the Army:

CARL E. VUONO
General, United States Army
Chief of Staff

OFFICIAL:

R. L. DILWORTH
Brigadier General, United States Army
The Adjutant General

DISTRIBUTION:
To be distributed in accordance with DA Form 12-25A, Unit Maintenance requirements for Boat, Bridge Erection, Inboard Diesel Engine, 27 Ft, (HPI-27A, 27B, 27C, 27D).

CHANGE No. 2

HEADQUARTERS
DEPARTMENT OF THE ARMY
WASHINGTON, D.C., 12 February 1987

Organizational Maintenance Repair Parts
and Special Tools List
Boat, Bridge Erection, Inboard Diesel Engine,
Aluminum Hull, 27 FT LG
Aluminum Company of America Model Hice-27D
NSN 1940-00-417-0526
Highway Products Model HPI-27C Modded
Highway Products Model HPI-27B Modded
Marinette Marine Corp. Model A27 Modded

TM 5-1940-221-20P, 22 October 1982, is changed as follows:

1. Remove and insert pages as indicated below. New or changed text material is indicated by a vertical bar in the margin. An illustration change is indicated by a miniature pointing hand.

Remove pages	Insert pages
i and ii	i and ii
123 and 124	123 and 124
127 and 128	127 and 128

2. Retain this sheet in front of manual for reference purposes.

By Order of the Secretary of the Army:

JOHN A. WICKHAM, JR.
General, United States Army
Chief of Staff

Official:

R. L. DILWORTH
Brigadier General, United States Army
The Adjutant General

DISTRIBUTION:
To be distributed in accordance with DA Form 12-25A, Organizational Maintenance requirements for Boat, Bridge Erection, Inboard Diesel Engine, 27 Ft, (HPI-27A, 27B, 27C, 27D) (TM 5-1940-221 Series)

CHANGE NO. 1

HEADQUARTERS
DEPARTMENT OF THE ARMY
WASHINGTON, D.C., 4 September 1984

Organizational Maintenance Repair Parts
and Special Tools Lists

BOAT, BRIDGE ERECTION, INBOARD DIESEL ENGINE,
ALUMINUM HULL, 27 FT LG
ALUMINUM COMPANY OF AMERICA MODEL HICE-27D
NSN 1940-00-417-0526

HIGHWAY PRODUCTS MODEL HPI-27C MODDED
HIGHWAY PRODUCTS MODEL HPI-27B MODDED
MARINETTE MARINE CORP. MODEL A27 MODDED

TM 5-1940-221-20P, 22 October 1982, is changed as follows:

1. Remove and insert pages as indicated below. New or changed text material is indicated by a vertical bar in the margin. An illustration change is indicated by a miniature pointing hand.

Remove pages	Insert pages
i and ii	i and ii
7 and 8	7 and 8
11 through 14	11 through 14
23 and 24	23 and 24
31 and 32	31 and 32
45 and 46	45 and 46
49 and 50	49 and 50
57 and 58	57 and 58
65 and 66	65 and 66
103 through 106	103 through 106
----	106.1 and 106.2
113 through 116	113 through 116

2. Retain this sheet in front of manual for reference purposes.

By Order of the Secretary of the Army:

JOHN A. WICKHAM, JR.
General, United States Army
Chief of Staff

Official:

ROBERT M. JOYCE
Major General, United States Army
The Adjutant General

DISTRIBUTION:
To be distributed in accordance with DA Form 12-25D, Organizational Maintenance Requirements for Special Equipment, Boat Bridge Erection.

TECHNICAL MANUAL
No. 5-1940-221-20P

HEADQUARTERS
DEPARTMENT OF THE ARMY
WASHINGTON, D.C., 22 October 1982

ORGANIZATIONAL MAINTENANCE REPAIR PARTS AND SPECIAL TOOLS LISTS

BOAT, BRIDGE ERECTION, INBOARD DIESEL ENGINE, ALUMINUM HULL, 27 FT LG ALUMINUM COMPANY OF AMERICA MODEL HICE-27D NSN 1940-00-417-0526

HIGHWAY PRODUCTS MODEL HPI-27C MODDED HIGHWAY PRODUCTS MODEL HPI-27B MODDED MARINETTE MARINE CORP. MODEL A27MODDED

Current as of 1 November 1981

REPORTING OF ERRORS AND RECOMMENDING IMPROVEMENTS

You can help improve this manual. If you find any mistakes or if you know of a way to improve the procedures, please let us know. Mail your letter, DA Form 2028 (Recommended Changes to Publications and Blank Forms) or DA Form 2028-2 located in the back of this manual direct to: Commander, U.S. Army Troop Support Command, ATTN: DRSTR-MPS, 4300 Goodfellow Blvd., St. Louis, MO 63120. A reply will be furnished to you.

TABLE OF CONTENTS

		Listing Page	Illus Figure
SECTION I.	INTRODUCTION	v	
II.	REPAIR PARTS LIST		
Group 01.	Lights		
	Running Light	6	1
	SpotlightMast Assembly	8	2
	Range Light	10	4
	Bow Light	12	5
Group 02.	Towing Attachments and Accessory Items		
	Towing Chock and Sheaves	14	6
	Push Knees	16	7
	Stern Section Fittings, On-Board Equipment and Cradle	20	8
	Bow Section Fittings, On-Board Equipment and Cradle	22	9
	Coupling Arm	24	10
	Coupling Yoke	26	11
	Coupling Hook	28	12

TABLE OF CONTENTS (CON'T)

		Listing Page	Illus Figure
Group 14.	Bilge Pump		
	Electric Bilge Pump	114	70
	Manual Bilge Pump	116	71
Group 15.	Fire Extinguisher System		
	Fire Extinguisher, Lines and Fittings	118	72
	NATIONAL STOCK NUMBER AND REFERENCE NUMBER INDEX		

TABLE OF CONTENTS (CON'T)

		Listing Page	Illus Figure
Group 03.	Access and Hatch Cover		
	Stern Hatch Cover	30	13
	Engine Hatch Covers	32	14
	Bow Hatch Cover	34	15
	Flooring and Storage Shelves	36	16
Group 04.	Controls		
	Transmission and Bracket Kit	38	17
	Transmission Cable and Bracket Kit	40	17A
	Governor Control Cables and Brackets Kit	42	18
Group 05.	Instrument Panel		
	Instrument Panel	44	19
	Switch Panel	46	20
	Fuse Panel	48	21
	Terminal Board	50	22
	Tachometer Drive	52	24
Group 06.	Fuel System		
	Fuel Strainer	54	25
	Fuel Tank Lines, Fittings, Alarm Bell, and Fuel Pressure and Sensor	56	26
Group 07.	Engine Exhaust Systme		
	Exhaust Pipes, Mufflers and Fittings	60	27
Group 08.	Engine Cooling System		
	Heat Exhchager, Cooling Lines and Fittings	64	28
Group 09.	Engine Starting System		
	Generator Regulator	66	29
	Magnetic Cranking Switch	68	30
	Batteries, Cover and Cables	70	31
Group 10.	Engine		
	V-Belt Shield, V-Belt and Generator Mounting Parts	72	33
	Generator	74	34
	Cranking Motor (Starter)	76	35
	Water Pump	78	36
	Expansion Tank	80	37
	Thermostat and Housing	82	38
	Exhaust Manifold	84	39
	Air Silencer, Emergency Stop Cable and Air Shut Down Housing	86	40
	Fuel Filter	89	43
	Fuel Pump	90	44
	Engine Lubricating Oil Filter and Oil Pressure Sensor	92	45
	Transmission Oil Cooler	94	46
	Valve Rocker Cover	96	48
	Oil Pan, Inlet Pipe, Screen and Dipstick	98	61
	Cylinder Block	100	62
Group 11.	Transmission		
	Throttle and Transmission Control Head	102	63
Group 12.	Steering System		
	Rudder Linkage	104	66
	Steering Quadrant	106	67
	Steering Wheel, Linkage and Gear Boxes	106.2	68
	Steering Wheel, Linkage and Gear Box	108	68A
Group 13.	Propeller and Propeller Shaft		
	Propeller, Strut and Shaft	112	69

Section I. INTRODUCTION

1. Scope. This manual lists repair parts, special tools, test, measurement, and diagnostic equipment (TMDE), and other support equipment required for operation and performance of organizational maintenance of the Boat Erection Bridge.

2. General.

a. Section II - Repair Parts List. A list of repair parts authorized for use in the performance of maintenance. The list also includes parts which must be removed for replacement of the authorized parts. Parts lists are composed of functional groups in ascending numerical sequence, with the parts in each group listed in figure and item number sequence. Bulk materials are listed in NSN sequence, as the last group in Section II.

b. (ALL) Special Tools, Test and Support Equipment - Section III. A list of special tools, test and support equipment authorized for the performance of maintenance at the organizational level.

c. Section IV - National Stock Number and Part Number Index. A list, in ascending numerical sequence, of all National Stock Numbers appearing in the listings, followed by a list, in alphanumeric sequence, of all part numbers appearing in the listings. National Stock Number and part numbers are cross-referenced to each illustration figure and item number appearance.

3. Explanation of Columns. The following provides an explanation of coulmns found in the tabular listings:

a. Illustration. This column is divided as follows:

(1) Figure Number. Indicates the figure number of the illustration in which the item is shown.

(2) Item Number. The number used to identify each item called out in the illustration.

b. Source, Maintenance, and Recoverability Codes (SMR).

(1) Source Code. Source codes are assigned to support items to indicate the manner of acquiring support items for maintenance, repair, or overhaul of end items. Source codes are entered in the first and second positions of the Uniform SMR Code format as follows:

Code	*Definition*
PA	Item procured and stocked for anticipated or known usage.
PB	Item procured and stocked for insurance purposes because essentiality dictates that a minimum quantity be available in the supply systems.
PC	Item procured and stocked and which otherwise would be coded PA except that it is deterorative in nature.
PD	Support item, excluding support equipment, procured for initial issue or outfitting and stocked only for subsequent or additional initial issues or outfittings. Not subject to automatic replenishment.
PE	Support equipment procured and stocked for initial issue or outfitting to specified maintenance repair activities.
PF	Support equipment which will not be stocked but which will be centrally procured on demand.
PG	Item procured and stocked to provide for sustained support for the life of the equipment. It is applied to an item peculiar to the equipment which, because of probable discontinuance or shutdown of production facilities, would prove uneconomical to reproduce at a later time.
KD	An item of a depot overhaul/repair kit and not purchased separately. Depot kit defined as a kit that provides items required at the time of overhaul or repair.
KF	An item of a maintenance kit and not purchased separately. Maintenance kit defined as a kit that provides an item that can be replaced at organizational or intermediate levels of maintenance.
KB	Item included in both a depot overhaul/repair kit and a maintenance kit.
MO	Item to be manufactured or fabricated at organizational level.
MF	Item to be manufactured or fabricated at the direct support maintenance level.
MH	Item to be manufactured or fabricated at the general support maintenance level.
MD	Item to be manufactured or fabricated at the depot maintenance level.
AO	Item to be assembled at organizational level.
AF	Item to be assembled at direct support maintenance level.

Recoverability Codes	*Definition*
O	Reparable item. When uneconomically reparable, condemn and dispose at organizational level.
F	Reparable item. When uneconomically reparable, condemn and dispose at the direct support level.
H	Reparable item. When uneconomically reparable, condemn and dispose at the general support level.
D	Reparable item. When beyond lower level repair capability, return to depot. Condemnation and disposal not authorized below depot level.
L	Reparable item. Repair, condemnation, and disposal not authorized below depot/specialized repair activity level.
A	Item requires special handling or condemnation procedures because of specific reasons (i.e., precious metal content, high dollar value, critical material or hazardous material). Refer to appropriate manuals/directives for specific instructions.

c. National Stock Number. Indicates the National Stock Number assigned to the item and will be used for requisitioning purposes.

d. Part Number. Indicates the primary number used by the manufacturer which controls the design and characteristics of the item by means of its engineering drawings, specifications standards, and inspection requirements to identify an item or range of items.

NOTE

When a stock numbered item is requisitioned, the repair part received may have a different part number than the part being replaced.

e. Federal Supply Code for Manufacturer (FSCM). The FSCM is a 5-digit numeric code listed in SB 708-42 which is used to identify the manufacturer, distributor, or Government agency, etc.

f. Description. Indicates the Federal item name and, if required, a minimum description to identify the item. Items that are included in kits and sets are listed below the name of the kit or set with the quantity of each item in the kit or set indicated in the quantity incorporated in unit column. When the part to be used differs between serial numbers of the same model, the effective serial numbers are shown as the last line of the description. In the Special Tools List, the initial basis of issue (BOI) appears as the last line in the entry for each special tool, TMDE, and support equipment. When density of equipments supported exceeds density spread indicated in the basis of issue, the total authorization is increased accordingly.

g. Unit of Measure (U/M). Indicates the standard of the basic quantity of the listed items as used in performing the actual maintenance function. This measure is expressed by a two-character alphabetical abbreviation (e.g., ea, in, pr, etc.). When the unit of measure differs from the unit of issue, the lowest unit of issue that will satisfy the required units of measure will be requisitioned.

h. Quantity Incorporated in Unit. Indicates the quantity of the item used in the breakout shown on the illustration figure, which is prepared for a functional group, subfunctional group, or an assembly. A "V" appearing in this column in lieu of a quantity indicates that no specific quantity is applicable, (e.g., shims, spacers, etc.).

4. Special Information.

a. "In the parts list, some items are indented to show that they are a component or components of the item under which they are indented."

b. Usable on codes are shown in the description column. Identification of the usable codes used in this publication are:

Code	*Used On*
CCC	Model HICE27D
CUA	Model HPI27CMODDED
CUB	Model HPI27BMODDED
CUC	Model A27MODDED

b. Repair parts kits and gasket sets appear as the last entries in the repair parts listing for the figure in which its parts are listed as repair parts or are listed at the end of the repair parts listing for the last figure containing parts of the kit.

c. The following publications pertain to the Boat Erection Bridge and its components.

TM 5-1940-221-12	Operator and Organizational Maintenance Manual
TM 5-1940-221-34	Direct and General Support Maintenance Manual

Code	Definition
AH	Item to be assembled at general support maintenance level.
AD	Item to be assembled at depot maintenance level.
XA	Item is not procured or stocked because the requirements for the item will result in the replacement of the next higher assembly.
XB	Item is not procured or stocked. If not available through salvage, requisition.
XD	A support item that is not stocked. When required, item will be procured through normal supply channels.

NOTE

Cannibalization or salvage may be used as a source of supply for any items source coded above except those coded XA or XD.

(2) Maintenance Code. Maintenance codes are assigned to indicate the levels of maintenance authorized to use and repair support items. The maintenance codes are entered in the third and fourth positions of the Uniform SMR Code format as follows:

(a) The maintenance code entered in the third position will indicate the lowest maintenance level authorized to remove, replace, and sue the support item. The maintenance code entered in the third position will indicate one of the following levels of maintenance.

Code	Application/Explanation
C	Crew or operator maintenance performed within organizational maintenance.
O	Support item is removed, replaced, used at the organizational level.
I	Support item is removed, replaced, used by the direct support element of integrated direct support maintenance.
F	Support item is removed, replaced, used at the direct support level.
H	Support item is removed, replaced, used at the general support level.
D	Support items that are removed, replaced used at depot, mobile depot, specialized repair activity only.

NOTE

Codes "I" and "F" will be considered the same by direct support units.

(b) The maintenance code entered in the fourth position indicates whether the item is to be repaired and identifies the lowest maintenance level with the capability to perform complete repair (i.e., all authorizedd maintenance functions). This position will contain one of the following maintenance codes:

Code	Application/Explanation
O	The lowest maintenance level capable of complete repair of the support item is the organizational level.
F	The lowest maintenance level capable of complete repair of the support item is the direct support level.
H	The lowest maintenance level capable of complete repair of the support item is the general support level.
D	The lowest maintenance level capable of complete repair of the support item is the depot level.
L	Repair restricted to designated specialized repair activity.
Z	Nonreparable. No repair is authorized.
B	No repair is authorized. The item may be reconditioned by adjusting, lubricating, etc., at the user level. No parts or special tools are procured for the maintenance of this item.

(3) Recoverability Code. Recoverability codes are assigned to support items to indicate the disposition action on unserviceable items. The recoverability code is entered in the fifth position of the Uniform SMR Code format as follows:

Recoverability Codes	Definition
Z	Nonreparable item. When unserviceable, condemn and dispose at the level indicated in Position 3.

TM 5-1940-221-34P	Direct and General Support Maintenance Repair Parts and Special Tools List
LO 5-1940-221-12	Lubrication Order

d. The illustration in this manual are identical to those published in TM 5-1940-221-34P. Only those parts assigned the third position SMR maintenance code "C" or "O" are listed in the tabular listing; therefore, there may be a break in the item number sequence. Only illustrations containing organizational authorized items appear in this manual.

5. How to Locate Repair Parts

a. When National Stock Number or Part Number is Unknown:

(1) First. Using the table of contents, determine the functional group within which the repair part belongs. This is necessary since illustrations are prepared for functional groups, and listings are divided into the same groups.

(2) Second. Find the illustration covering the functional group to which the repair part belongs.

(3) Third. Identify the repair part on the illustration and note the illustration figure and item number of the repair part.

(4) Fourth. Using the Repair Parts Listings, find the figure and item number noted on the illustration.

b. When National Stock Number or Part Number is Known.

(1) First. Using the Index of National Stock Numbers and Part Numbers, find the pertinent National Stock Number or part number. This index is in ascending NIIN sequence followed by a list of part numbers in ascending alphanumeric sequence, cross-referenced to the illustration figure number and item number.

(2) Second. After finding the figure and item number, locate the figure and item number of the repair parts list.

6. Abbreviations.

Abbreviations	*Explanation*
deg	degree(s)
ea	each
ft	feet (foot)
grp	group
id	inside diameter
in.	inch(es)
lg	long (length)
mtg	mounting(s)
No.	Number(s)
od	outside diameter

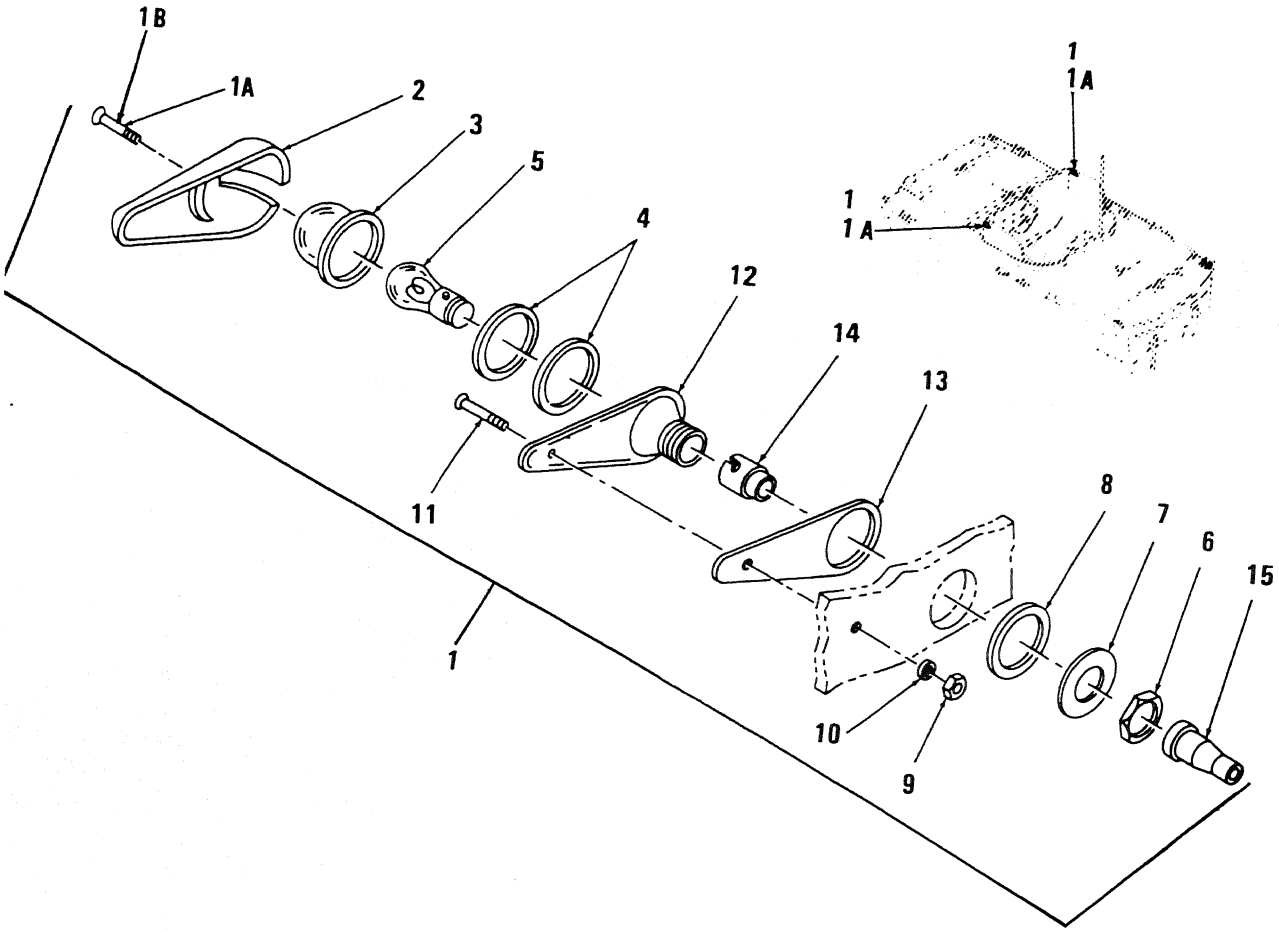

Figure 1. Running Light

(1) ILLUSTRATION (a) FIG NO.	(b) ITEM NO.	(2) SMR CODE	(3) NATIONAL STOCK NUMBER	(4) FSCM	(5) PART NUMBER	(6) DESCRIPTION USABLE ON CODE	(7) U/M	(8) QTY INC IN UNIT
						GROUP 01 LIGHTS		
1	1	PAOZZ	6220-01-130-1592	79577	13220E6312-2	.LIGHT,NAVIGATIONAL , GREEN.....CCC,CUA	EA	1
1	1	PAOZZ	6220-01-130-1591	79577	13220E6312-1	.LIGHT,NAVIGATIONAL , RED.....CCC,CUA	EA	1
1	1A	PAOOO	6220-00-307-8820	46576	F1G91-R C2	.LIGHT PORT RUNNING.....CUB,CUC	EA	1
1	1A	PAOOO	6220-00-389-6215	46576	91-2G	.LIGHT STARBOARD RUNNING.....CUB,CUC	EA	1
1	1B	PAOZZ	5305-00-727-8834	96906	MS51959-48	.SCREW,MACHINE RETAINER MTG,8-32 THD SIZE.....CCC,CUA	EA	2
1	2	XBOZZ		79577	3885-2	.RETAINER RUNNING LIGHT.....CCC,CUA	EA	3
1	3	PAOOO	6220-00-838-0181	79577	3885-7R	.GLOBE RED,RUNNING LIGHT PORT.....CCC,CUA	EA	1
1	3	PAOZZ	6220-00-299-6125	46576	259-2R	.LENS RED.....CUB,CUC	EA	1
1	3	PAOZZ	6220-00-299-6124	46576	259-2G	.LENS GREEN.....CUB,CUC	EA	1
1	4	PAOZZ	5330-00-835-1886	79577	3885-9	.GASKET GLOBE,RUNNING LIGHT.....CCC,CUA	EA	4
1	5	PAOZZ	6240-00-155-7795	96906	MS15584-15	.LAMP INCANDESCENT,RUNNING LIGHT.....CCC,CUB,CUC	EA	2
1	5	PAOZZ	6240-00-155-7784	96906	MS35478-307	.LAMP,INCANDESCENT RUNNING LIGHT.....CUA	EA	1
1	6	XBOZZ		79577	3885-4	.NUT,HEXAGON ADAPTER RUNNING LIGHT.....CCC,CUA	EA	4
1	7	XAOZZ		79577	3885-3	.WASHER,FLAT ADAPTER RUNNING LIGHT.....CCC,CUA	EA	2
1	8	XAOZZ		79577	3885-5	.ADAPTER,RETAINER RUNNING LIGHT.....CCC,CUA	EA	2
1	9	PAOZZ	5310-00-941-9452	96906	MS21083B08	.NUT,SELF-LOCKING HEXAGON.....CCC,CUA	EA	2
1	10	PAOZZ	5310-00-045-5206	96906	MS15795-907	.WASHER,FLAT BASE SCREW,RUNNING LIGHT.....CCC,CUA	EA	2
1	11	PAOZZ	5305-00-764-0075	96906	MS51959-49	.SCREW,MACHINE BASE MTG,RUNNING LIGHT.....CCC,CUA	EA	2
1	12	XBOZZ		79577	3885-1	.BASE RUNNING LIGHT.....CCC,CUA	EA	2
1	13	XBOZZ	5330-00-835-1885	79577	3885-8	.GASKET RUNNING LIGHT.....CCC,CUA	EA	2
1	14	XBOZZ		79577	42-002-25	.SOCKET,LAMP RUNNING LIGHT.....CCC,CUA	EA	2
1	15	PAOZZ	5975-00-284-9041	77060	5289527	.NIPPLE,SOCKET RUNNING LIGHT.....CCC,CUA	EA	2

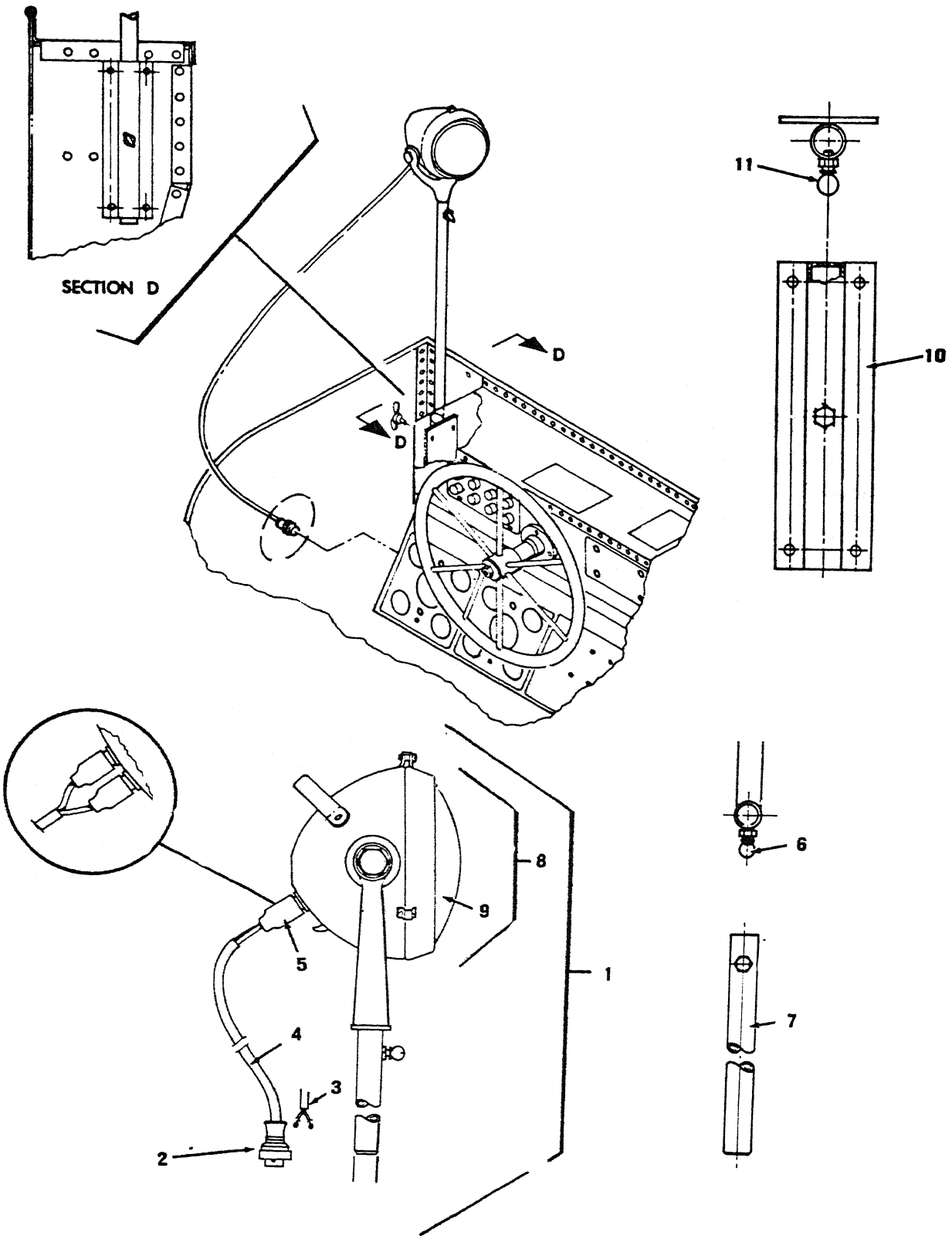

Figure 2. Spotlight Mast Assembly

(1) ILLUSTRATION (a) FIG NO.	(b) ITEM NO.	(2) SMR CODE	(3) NATIONAL STOCK NUMBER	(4) FSCM	(5) PART NUMBER	(6) DESCRIPTION USABLE ON CODE	(7) U/M	(8) QTY INC IN UNIT
2	1	PAOOO	2040-01-090-3307	97403	13222E7249	SPOTLIGHT MAST ASSY.....	EA	1
2	2	XDOZZ		79645	R-1538	.PLUG.....	EA	1
2	3	PAOZZ	5940-00-143-4780	96906	MS25036-109	.TERMINAL,LUG.....	EA	2
2	4	PAOZZ	6145-00-889-0645	81349	C0-02MOF2-16-0 335	.CABLE 4 FT REQUIRED.....	FT	1
2	5	PAOZZ	5935-00-462-6603	96906	MS27142-2	.CONNECTOR,PLUG,ELEC.....	EA	2
2	6	PAOZZ	5305-00-340-6364	96906	MS21316-22	.THUMBSCREW MAST SPOTLIGHT.....	EA	1
2	7	XDOZZ		97403	13222E7261	.MAST SPOTLIGHT.....	EA	1
2	8	PAOOO	6220-00-878-7301	96906	MS51320-1	.FLOODLIGHT.....	EA	1
2	9	PAOZZ	6240-00-295-2421	96906	MS18006-4572	..LAMP,INCANDESCENT.....	EA	1
2	10	PAOZZ	2040-01-090-3306	97403	13222E7239	.BRACKET MOUNTING SEARCHLIGHT.....	EA	1
2	11	PAOZZ	5305-00-056-9384	96906	MS21316-33	.THUMBSCREW BRACKET SEARCHLIGHT.....	EA	1

FIGURE 3 NOT APPLICABLE

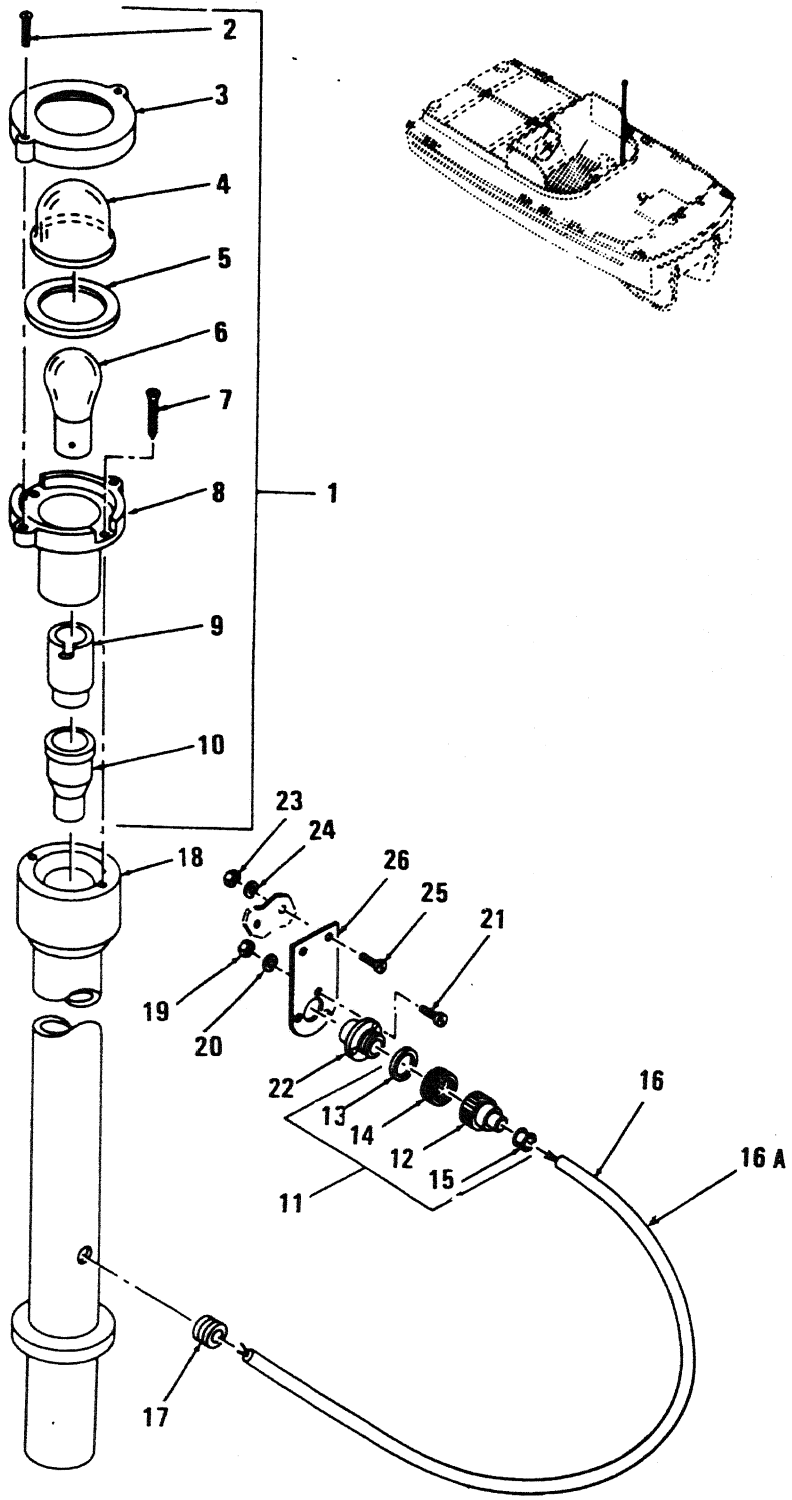

Figure 4. Range Light

(1) ILLUSTRATION (a) FIG NO	(b) ITEM NO	(2) SMR CODE	(3) NATIONAL STOCK NUMBER	(4) FSCM	(5) PART NUMBER	(6) DESCRIPTION USABLE ON CODE	(7) U/M	(8) QTY INC IN UNIT
4		PAOZZ	6220-01-105-6432	97403	13222E7250	LIGHT MAST ASSY STERN.....CUB,CUC	EA	1
4		PAOZZ	6240-00-155-7790	96906	MS15584-16	.LAMP,INCANDESCENT.....CUB,CUC	EA	4
4		XBOZZ		97403	13222E7242	MAST LIGHT.....CUB,CUC	EA	1
4		PAOZZ	6220-00-837-2176	97403	13213E5184	LIGHT AND MAST ASSEMBLY,RANGE.....CCC,CUA	EA	1
4	1	PAOZZ	6220-00-838-5977	79577	FIG3894	.LIGHT,NAVIGATIONAL, STERN.....CCC,CUA	EA	1
4	2	XDOZZ		79577	5322-6	..SCREW MACHINE COVER,5-40 RHB X 3/8 IN.LG.....CCC,CUA	EA	2
4	3	XBOZZ		79577	3887-2	..RETAINER CLEAR GLOBE.....CCC,CUA	EA	1
4	4	PAOZZ	6220-00-838-0182	79577	3886-3	..GLOBE CLEAR.....CCC,CUA	EA	1
4	5	PAOZZ		79577	3895-3	..GASKET GLOBE.....CCC	EA	1
4	5	PAOZZ	5330-00-835-1886	79577	3885-9	..GASKET GLOBE.....CUA	EA	1
4	6	PAOZZ	6240-00-155-7795	96906	MS15584-15	..LAMP,INCANDESCENT.....CCC,CUA	EA	1
4	7	PAOZZ	5305-00-770-2579	96906	MS51959-15	..SCREW,MACHINE MTG,4-40 UNC-2A X 3/8 IN.LG.....CCC,CUA	EA	2
4	8	XAOZZ		79577	3892-1	..BASE.....CCC,CUA	EA	1
4	9	XBOZZ		79577	42-002-25	..SOCKET,LIGHT.....CCC	EA	1
4	9	XDOZZ		79577	3885-13	..SOCKET LIGHT.....CUA	EA	1
4	10	PAOZZ	5975-00-284-9041	77060	5289527	..NIPPLE.....CCC,CUA	EA	1
4	11	XBOZZ	5935-00-089-0304	79577	FIG151	..PLUG,CONNECTOR.....CCC	EA	1
4	12	XAOZZ		13445	M-424	..PLUG.....CCC,CUA	EA	1
4	13	XAOZZ		79577	151-3	..GASKET,PLUG 13/16 OD X 5/8 ID X 3/32 IN.THK.....CCC,CUA	EA	1
4	14	XAOZZ		79577	151-1	..CAP,PLUG 1 1/8 DIA X 5/16 IN.LG.....CCC,CUA	EA	1
4	15	XAOZZ		79577	151-4	..GROMMET,RUBBER.....CCC,CUA	EA	1
4	16	MOOZZ		97403	13213E5480	.CABLE ASSEMBLY SPEC RANGE LIGHT MANUFACTURE FROM.....CCC,CUA	EA	1
4	16A	XBOZZ		81349	C0-02MOF2-16-03 35	..CABLE,ELECTRICAL 6 FT REQUIRED.....CCC,CUA	FT	V
4	17	PAOZZ	5325-00-185-0004	96906	MS35489-40	.GROMMET,NONMETALLIC 3/8 ID X 5/8 GROOVE DIA X 1/8 GROOVE WIDTH.....CCC,CUA	EA	1
4	18	XBOZZ	2020-01-098-4672	97403	13213E5187	.MAST STERN,LIGHT.....CCC,CUA	EA	1
4	19	PAOZZ	5310-00-905-8451	96906	MS21083N06	NUT,SELF LOCKING.....CCC,CUA,CUC	EA	3
4	20	PAOZZ	5310-00-082-1404	96906	MS27183-6	WASHER,FLAT.....CCC,CUA	EA	3
4	21	PAOZZ	5305-00-958-5450	96906	MS35190-240	SCREW,MACHINE.....CCC,CUA	EA	3
4	22	PBOZZ		79577	FIG149	CONNECTOR,DECK SOCKET.....CCC,CUA	EA	1
4	23	PAOZZ	5310-00-877-5797	96906	MS21044N3	NUT,SELF LOCKING.....CCC,CUA	EA	2
4	24	PAOZZ	5310-00-809-8546	96906	MS27183-8	WASHER,FLAT.....CCC,CUA	EA	2
4	25	PAOZZ	5305-00-989-7435	96906	MS35207-264	SCREW,MACHINE.....CCC,CUA	EA	2
4	26	XBOZZ		97403	13213E6680	PLATE,RETAINING.....CCC,CUA	EA	1

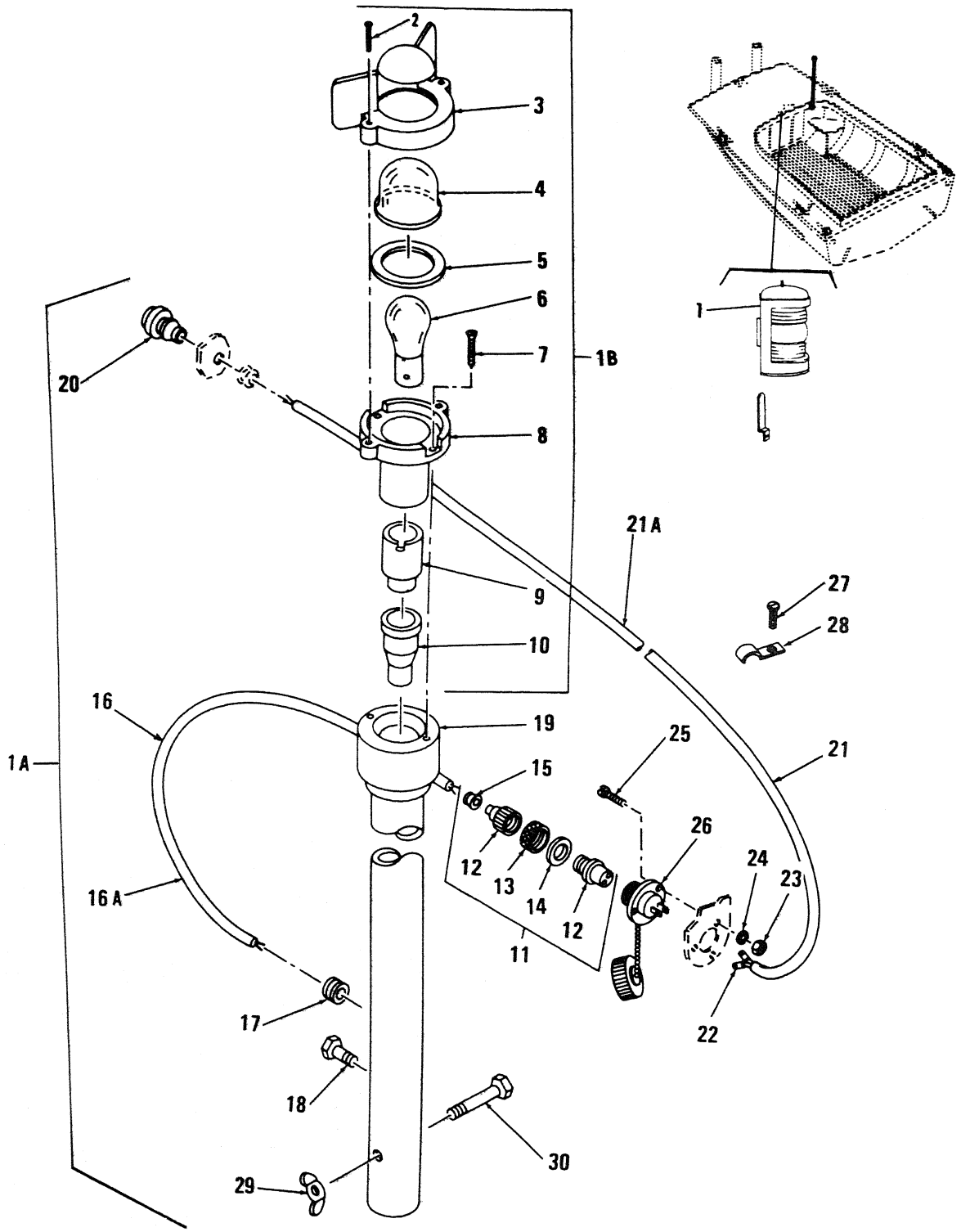

Figure 5. Bow Light

(1) ILLUSTRATION (a) FIG NO	(b) ITEM NO	(2) SMR CODE	(3) NATIONAL STOCK NUMBER	(4) FSCM	(5) PART NUMBER	(6) DESCRIPTION USABLE ON CODE	(7) U/M	(8) QTY INC IN UNIT
5	1	PAOZZ	6220-01-098-7503	97403	13213E5180-2	LIGHT AND MAST ASSE ASSEMBLY.....CCC,CUA	EA	1
5	1	PAOZZ	6220-01-104-0621	46576	FIG5-A C-2 GALV	LIGHT ASSY BOW.....CUB,CUC	EA	1
5	1B	PAOZZ	6220-00-839-7439	75977	FIG3893	.LIGHT,NAVIGATIONAL, BOW.....CCC,CUA	EA	1
5	2	XDOZZ		79577	5322-6	..SCREW,MACHINE RETAINER,LIGHT 0.540 X 3/8 IN.LG.....CCC,CUA	EA	2
5	3	XBOZZ		79577	3883-1	..RETAINER GLOBE,BOW LIGHT.....CCC,CUA	EA	1
5	4	PAOZZ	6220-00-838-0182	79577	3886-3	..GLOBE CLEAR,BOW LIGHT.....CCC,CUA	EA	1
5	5	PAOZZ	5330-00-835-1886	79577	3885-9	..GASKET GLOBE,BOW LIGHT.....CCC,CUA	EA	1
5	6	PAOZZ	6240-00-155-7795	96906	MS15584-15	..LAMP INCANDESCENT,BOW.....CCC,CUA	EA	1
5	7	PAOZZ	5305-00-770-2579	96906	MS51959-15	..SCREW,MACHINE BASE,BOW LIGHT.....CCC,CUA	EA	2
5	8	XAOZZ		79577	3892-1	..BASE LAMP,BOW LIGHT.....CCC,CUA	EA	1
5	9	XBOZZ	5305-00-770-2579	59577	42-002-25	..SOCKET LAMP,BOW LIGHT.....CCC,CUA	EA	1
5	10	PAOZZ	5975-00-284-9041	77060	5289527	..NIPPLE SOCKET,BOW LIGHT.....CCC,CUA	EA	1
5	11	XBOZZ	5935-00-089-0304	79577	FIG151	.PLUG CONNECTOR,BOW.....CCC,CUA	EA	1
5	12	XAOZZ		13445	M423	..PLUG, CONNECTOR, BOW LIGHT.....CCC,CUA	EA	1
5	13	XAOZZ		79577	151-1	..CAP PLUG,BOW LIGHT.....CCC,CUA	EA	1
5	14	XAOZZ		79577	151-3	..GASKET PLUG,BOW LIGHT.....CCC,CUA	EA	1
5	15	XAOZZ		79577	151-4	..GROMMET PLUG,BOW LIGHT.....CCC,CUA	EA	1
5	16	MOOZZ		97403	13213E5480	.CABLE ASSEMBLY SPEC SOCKET.....CCC,CUA	EA	1
5	16A	XBOZZ		81349	C0-02MOF2-16-03 35	..CABLE,ELECTRIC 5 FT REQUIRED.....CCC,CUA	RL	V
5	17	PAOZZ	5325-00-185-0004	96906	MS35489-4	GROMMET,NONMETALLIC POST,BOW LIGHT,3/8 ID X 5/8 GROOVE DIA X 1/8 IN.GROOVE WIDTH.....CCC,CUA	EA	1
5	18	PAOZZ	5305-00-478-0273	96906	MS35307-355	SCREW,CAP,HEXAGON HEAD.....CCC,CUA	EA	1
5	19	XBOZZ	2040-01-003-2372	97403	13213E5183	POST ASSEMBLY.....CCC,CUA	EA	1
5	20	XBOZZ	5935-00-089-0304	79577	FIG151	PLUG CONNECTOR.....CCC,CUA	EA	1
5	21	MOOZZ		97403	13213E5480	CABLE ASSEMBLY SPEC MANUFACTURE FROM.....CCC,CUA	EA	2
5	21A	XBOZZ		81349	C0-02MOF2-16-03 35	.CABLE,ELECTRIC 15 FT REQUIRED.....CCC,CUA	RL	V
5	22	PAOZZ		96906	MS25036-6	.TERMINAL LUGS.....CCC,CUA	EA	2
5	23	PAOZZ	5310-00-905-8451	96906	MS21083N06	NUT,SELF LOCKING.....CCC,CUA	EA	5
5	24	PAOZZ	5310-00-082-1404	96906	MS27183-6	WASHER,FLAT.....CCC,CUA	EA	6
5	25	PAOZZ	5305-00-958-5450	96906	MS35190-240	SCREW,MACHINE.....CCC,CUA	EA	6
5	26	PBOZZ		79577	FIG149	CONNECTOR,DECK.....CCC,CUA	EA	2
5	27	PAOZZ	5305-00-855-0957	96906	MS24629-46	SCREW,SELF TAPPING.....CCC,CUA	EA	4
5	28	PAOZZ	5340-00-827-2453	96906	MS35150-5	STRAP,RETAINING.....CCC,CUB	EA	4
5	29	PAOZZ	5310-00-889-2606	96906	MS35425-42	NUT,PLAIN WING,BOW LIGHT,3/8-16 IN.SCREW SIZE.....CCC,CUA	EA	1
5	30	PAOZZ	5305-00-269-3216	96906	MS90725-66	SCREW CAP,HEXAGON HEAD.....CCC,CUA	EA	1

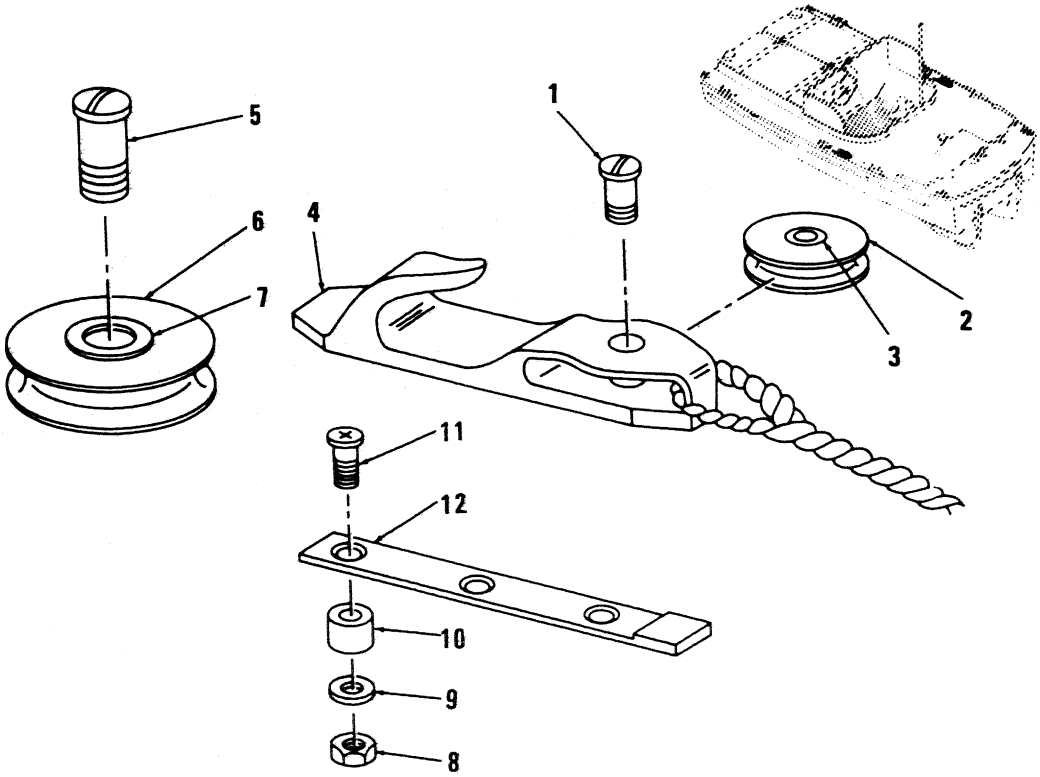

Figure 6. Towing Chock and Sheaves

(1) ILLUSTRATION (a) FIG NO	(b) ITEM NO	(2) SMR CODE	(3) NATIONAL STOCK NUMBER	(4) FSCM	(5) PART NUMBER	(6) DESCRIPTION USABLE ON CODE	(7) U/M	(8) QTY NO IN UNIT
						GROUP 02 TOWING ATTACHMENT AND ACCESSORY		
6	1	PAOZZ	5305-00-032-4080	97403	13213E5329-2	STUD,SHEAVE,HAUL CHOCK.....	EA	2
6	1	PAOZZ	5305-00-032-4057	97403	13213E5329-1	SCREW,MACHINE.....	EA	2
6	2	PAOZZ	3020-00-031-7596	97403	13213E5327	SHEAVE BASE HAUL CHOCK 2.50 DIA.....	EA	2
6	3	XBOZZ		97403	13213E5327-2	BUSHING,SHEAVE.....	EA	2
6	4	PAOZZ	2040-00-498-6238	97403	13213E5325	BASE,HAUL CHOCK.....	EA	1
6	5	PAOZZ		97403	13213E5328	STUD SHEAVE,ROLLER CHOCK.....	EA	2
6	6	PAOZZ	2040-00-889-5345	97403	13213E5326	ROLLER,CHOCK ROLLER CHOCK 2.75 DIA.....	EA	2
6	7	XAOZZ		71366	P62-9	BEARING,SLEEVE.....	EA	2
6	8	PAOZZ	5310-00-409-3701	96906	MS17828-5C	NUT,SELF LOCKING SLIDE,HAUL CHOCK,5/16-18 IN.THD SIZE SCREW.	EA	6
6	9	PAOZZ	5310-00-081-4219	96906	MS27183-12	WASHER,FLAT SLIDE,HAUL CHOCK,0.343 ID X 0.687 OD X 0.065 IN.THK.....	EA	6
6	10	XBOZZ		97403	13213E5316	SPACER,SLIDE,HAUL CHOCK.....	EA	6
6	11	PAOZZ	5305-00-959-2722	96906	MS35190-308	SCREW,MACHINE SLIDE,HAUL CHOCK,5/16-18 X 1 1/2 IN.LG.....	EA	6
6	12	PBOZZ	2040-00-997-6045	97403	13213E5335	SLIDE HAUL CHOCK,BASE.....	EA	2

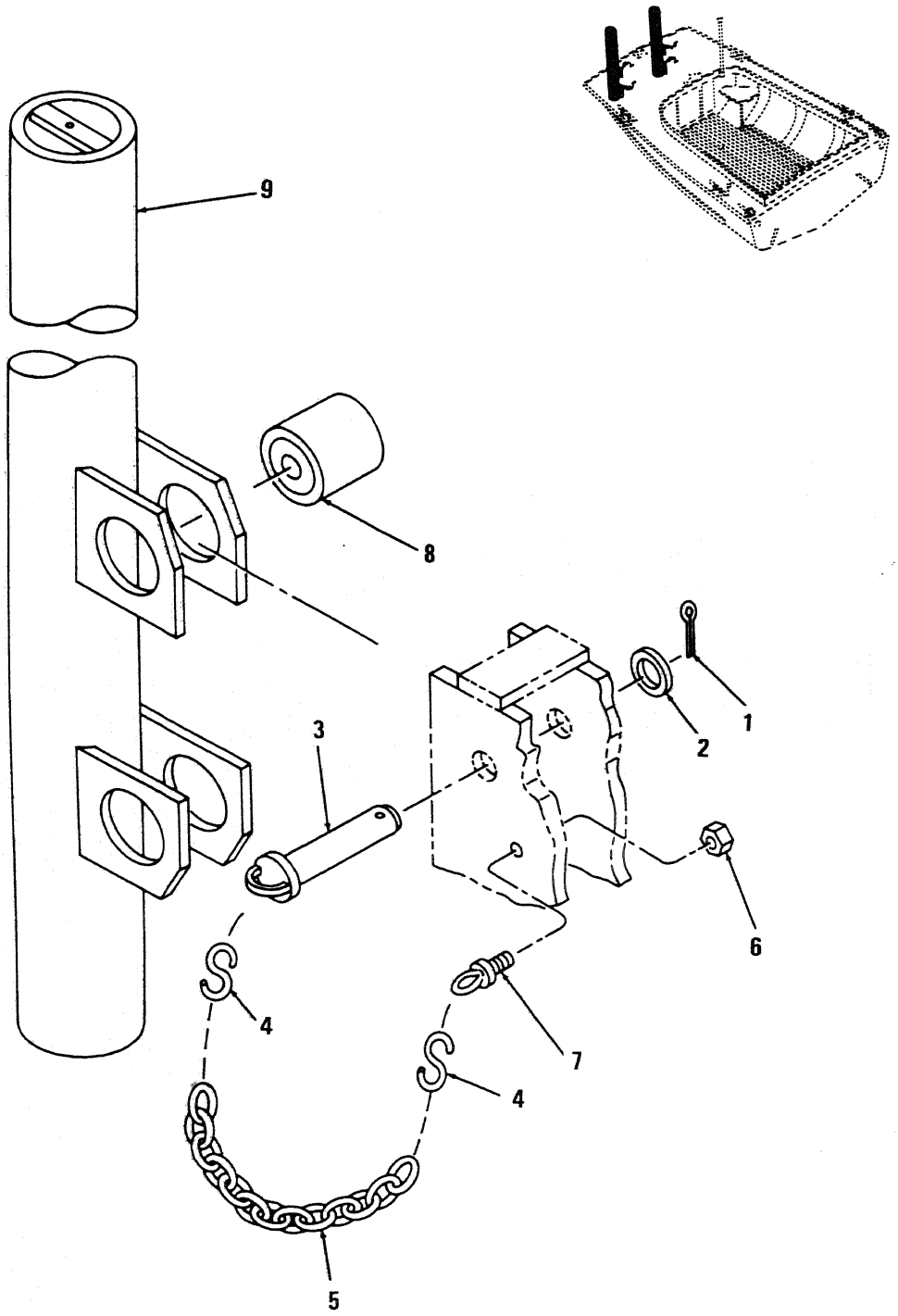

Figure 7. Push Knees (Sheet 1 of 2)

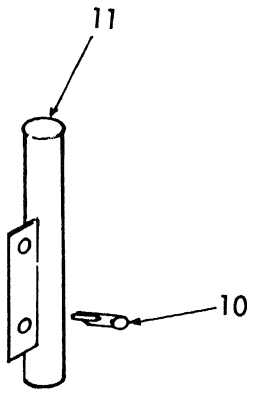

Figure 7 **Push Knees.** (Sheet 2 of 2)

SECTION II

(1) ILLUSTRATION (a) FIG NO	(b) ITEM NO	(2) SMR CODE	(3) NATIONAL STOCK NUMBER	(4) FSCM	(5) PART NUMBER	(6) DESCRIPTION / USABLE ON CODE	(7) U/M	(8) QTY INC IN UNIT
7	1	PAOZZ	5315-00-241-7332	96906	MS24665-374	PIN,COTTER PUSHING KNEE.....CCC,CUA	EA	4
7	2	PAOZZ	5310-00-809-8541	96906	MS27183-27	WASHER,FLAT PUSHING KNEE.....CCC,CUA	EA	4
7	3	PAOZZ	2040-00-008-9796	97403	13216E6684	PIN, PUSHING KNEE A PUSHING KNEE ASSEMBLY.....CCC,CUA	EA	4
7	4	XAOZZ		96906	MS87006-63	LINK,CHAIN.....CCC,CUA	EA	8
7	5	XAOZZ		97403	13216E6684-4	CHAIN.....CCC,CUA	EA	4
7	6	XAOZZ		96906	MS16228-1	NUT,SELF LOCKING.....CCC,CUA	EA	4
7	8	PAOZZ	2040-00-450-1550	97403	13216E6683	BUSHING PUSHING KNEE.....CCC,CUA	EA	4
7	9	PAOZZ	2040-00-484-5725	97403	13216E6685	KNEE,PUSHING.....CCC,CUA	EA	2
7	10	PAOZZ	2040-00-353-4928	97403	13222E7259	.PIN TOGGLE.....CUB,CUC	EA	2
7	11	PAOZZ	2040-00-353-4925	97403	13222E7258	.KNEE PUSHING.....CUB,CUC	EA	1

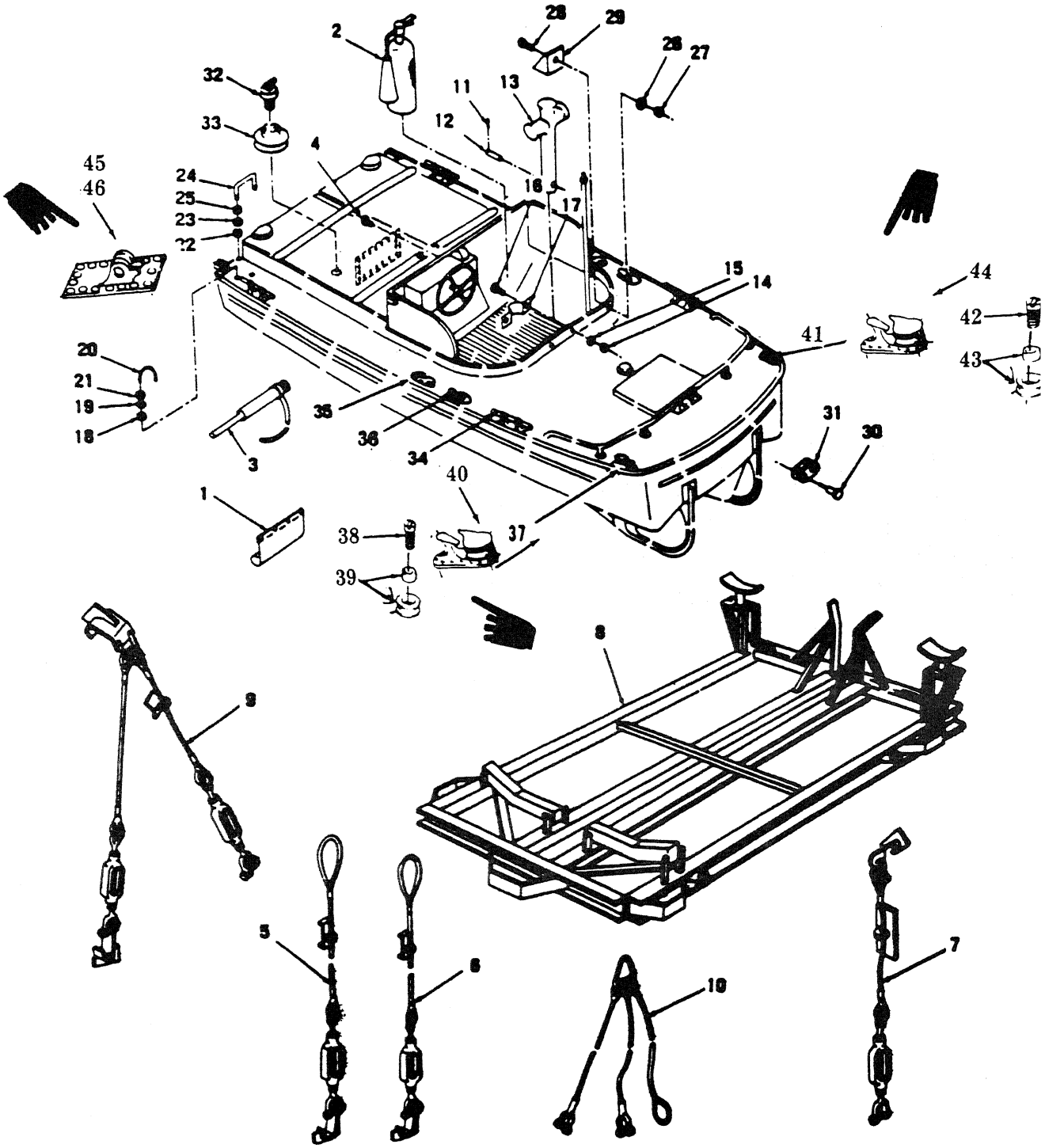

Figure 8. Stern Section Fittings, On-Board Equipment and Cradle

2) MR ODE	(3) NATIONAL STOCK NUMBER	(4) FSCM	(5) PART NUMBER	(6) DESCRIPTION USABLE ON CODE	(7) U/M	(8) QTY INC IN UNIT
AOZZ	2090-00-997-6050	97403	13213E5474	COVER, INSTRUMENT PA	EA	1
AOZF	4210-00-270-4512	81349	02910	EXTINGUISHER FIRE	EA	1
AOZZ	4320-00-775-3793	97403	13220E4451	PUMP, RECIPROCATING, HAND OIL	EA	1
BOZZ	5325-00-189-9860	81349	MILF5591TYPE2STYLE2SIZE5	STUD ASSY ACCESS PANEL CCC	EA	20
AOZZ	2020-00-997-6038	97403	13213E5487	CABLE ASSEMBLY, PORT, STERN	EA	1
AOZZ	2020-00-997-6037	97403	13213E5488	CABLE ASSEMBLY STBD, STERN	EA	1
AOZZ	2020-00-989-3271	97403	13213E5485	CABLE ASSEMBLY STERN	EA	2
BOZZ	2090-00-620-5525	97403	13213E5490	CRADLE, BOAT	EA	1
AOZZ	2020-00-997-6036	97403	13213E5492	CABLE ASSEMBLY TIE DOWN ASSY, STBD	EA	1
AOZZ	2020-00-997-6035	97403	13213E5491	CABLE ASSEMBLY TIE DOWN ASS, PORT	EA	1
AOZZ	2020-00-997-6034	97403	13213E5208	SLING, MULTIPLE LEG STERN LIFTING	EA	1
AOZZ	5315-00-839-5822	96906	MS24665-353	PIN, COTTER LOCK BAR	EA	2
BOZZ		97403	13213E5346	BAR, LOCK TOWING BITT	EA	1
BOZZ		97403	13213E5348	BITT, TOWING, STERN	EA	1
AOZZ	5310-00-245-3504	96906	MS17828-8C	NUT SELF-LOCKING, CLAMP TOWING BITT	EA	6
AOZZ	5310-00-167-0823	88044	AN960-816	WASHER, FLAT CLAMP TOWING BITT	EA	6
AOZZ	5305-00-964-0589	96906	MS90725-115	SCREW CAP, HEXAGON, CLAMP TOWING BITT	EA	6
BOZZ		97403	13213E5347	CLAMP TOWING BITT	EA	1
AOZZ	5310-00-956-3150	96906	MS17828-14F	NUT SELF LOCKING, HEXAGON, 7/8-14 IN	EA	4
AOZZ	5310-00-809-8540	96906	MS27183-25	WASHER, FLAT U-BOLT, 0.938 X 1.750 X 0.134 IN	EA	8
BOZZ		97403	13213E5283-3	U-BOLT	EA	1
AOZZ	5310-00-942-5183	96906	MS21083N14	NUT, SELF LOCKING HEXAGON, U-BOLT, 7/8-14 IN	EA	4
AOZZ	5310-00-031-0919	96906	MS17828-10F	NUT, SELF LOCKING HEXAGON, BAR LIFTING, 5/8-18 IN	EA	4
AOZZ	5310-00-823-8803	96906	MS27183-21	WASHER, FLAT BAR LIFTING 0.656 X 1.312 X 0.095 IN	EA	8
BOZZ		97403	13213E5282	BAR, LIFTING	EA	2
AOZZ	5310-00-925-9642	96906	MS21083N10	NUT, HEXAGON BAR LIFTING	EA	4
AOZZ	5310-00-701-5786	96906	MS17828-6C	NUT, SELF LOCKING HEXAGON, 3/8-16 IN	EA	1
AOZZ	5310-00-080-6004	96906	MS27183-14	WASHER, FLAT COCKPIT STEP, 0.416 X 0.812 X 0.065 IN. LG	EA	1
AOZZ	5305-00-984-5691	96906	MS35206-311	SCREW, MACHINE COCKPIT STEP, 3/8-16 X 1 IN. LG	EA	1
BOZZ	2040-00-212-7859	97403	13213E5191	STEP, COCKPIT	EA	1
AOZZ	5315-00-835-1948	97403	13213E5338	PIN, TOGGLE	EA	2
AOZZ	2040-00-575-4787	97403	13213E5336	YOKE, CONNECTOR, BOW	EA	1
PAOZZ	5340-00-163-4713	97403	13213E5373	DRAIN PLUG STERN	EA	1
PAOZZ	2040-00-989-3268	97403	13213E5334	BASE, CLEAT	EA	8
XDOZZ		97403	13213E5332	CHOCK ASSY, HAUL BASE	EA	2
XDOZZ		97403	13213E5500	CHOCK ASSY, ROLLER PORT	EA	1
PAOZZ		97403	13213E5328	.STUD, SHEAVE	EA	1
PAOZZ	2040-00-889-5345	97403	13213E5326	.SHEAVE AND BUSHING	EA	1
PAOZZ	2040-00-498-6237	97403	13213E5353	.ROLLER, CHOCK PORT	EA	1
XDOZZ		97403	13213E5330	CHOCK ASSY, ROLLER STED	EA	1
PAOZZ		97403	13213E5328	.STUD, SHEAVE	EA	1
PAOZZ	2040-00-889-5345	97403	13213E5326	.SHEAVE AND BUSHING	EA	1
PAOZZ	2040-00-498-6239	97403	13213E5324	.ROLLER, CHOCK PORT	EA	1

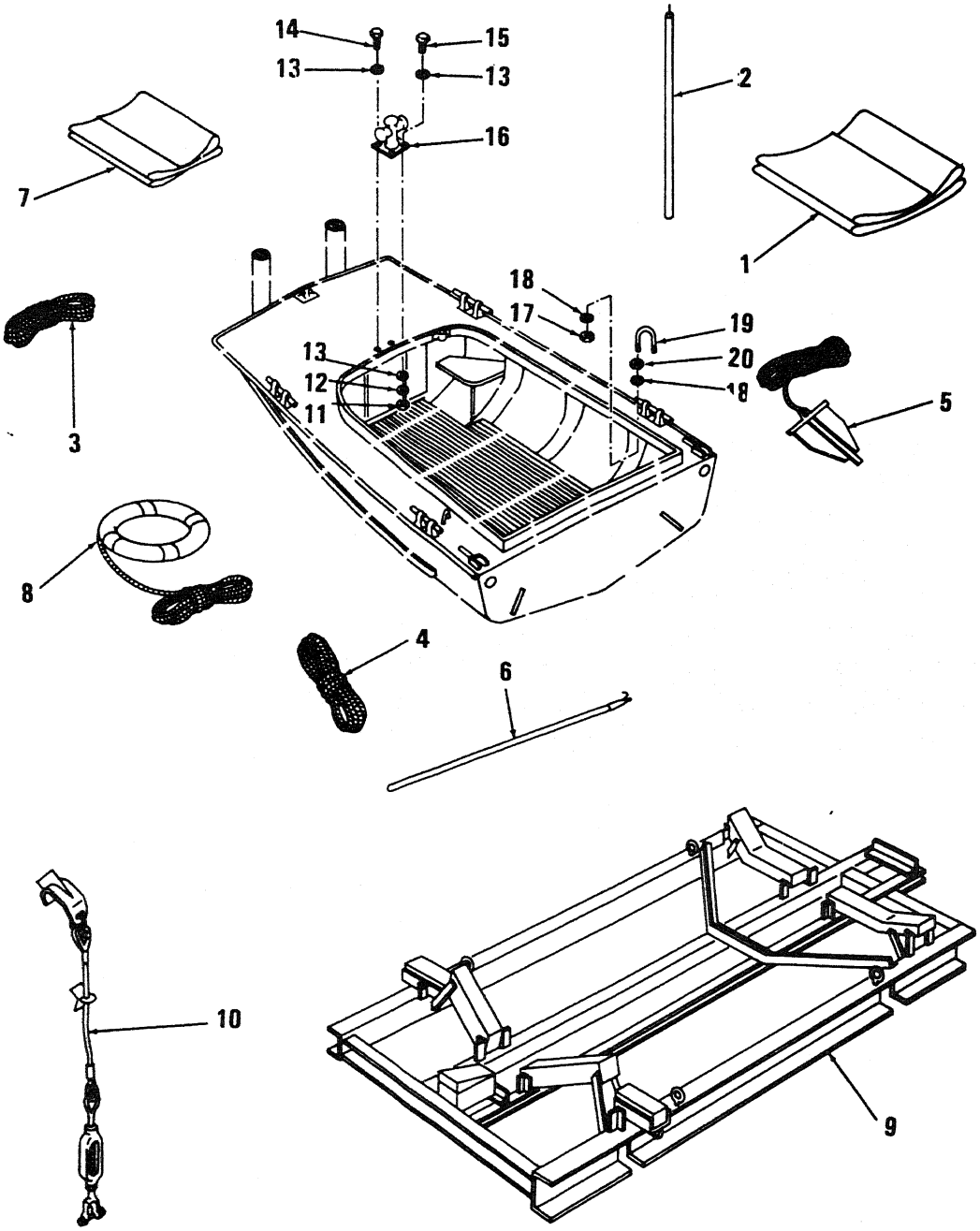

Figure 9. Bow Section Fittings, On-Board Equipment and Cradle

(1) ILLUSTRATION (a) FIG NO	(b) ITEM NO	(2) SMR CODE	(3) NATIONAL STOCK NUMBER	(4) FSCM	(5) PART NUMBER	(6) DESCRIPTION USABLE ON CODE	(7) U/M	(8) QTY INC IN UNIT
8	1	PAOZZ	2090-00-997-6050	97403	13213E5474	COVER,INSTRUMENT PA	EA	1
8	2	PAOZF	4210-00-270-4512	81349	02910	EXTINGUISHER FIRE	EA	1
8	3	PAOZZ	4320-00-775-3793	97403	13220E4451	PUMP,RECIPROCATING RECIPROCATING,HAND OIL	EA	1
8	4	XBOZZ	5325-00-189-9860	81349	MILF5591TYPE2STYLE2SIZE5	STUD ASSY ACCESS PANEL CCC	EA	20
8	5	PAOZZ	2020-00-997-6038	97403	13213E5487	CABLE ASSEMBLY PORT,STERN	EA	1
8	6	PAOZZ	2020-00-997-6037	97403	13213E5488	CABLE ASSEMBLY STBD,STERN	EA	1
8	7	PAOZZ	2020-00-989-3271	97403	13213E5485	CABLE ASSEMBLY STERN	EA	2
8	8	XBOZZ	2090-00-620-5525	97403	13213E5490	CRADLE,BOAT	EA	1
8	9	PAOZZ	2020-00-997-6036	97403	13213E5492	CABLE ASSEMBLY TIE DOWN ASSY,STBD	EA	1
8	9	PAOZZ	2020-00-997-6035	97403	13213E5491	CABLE ASSEMBLY TIE DOWN ASS,PORT	EA	1
8	10	PAOZZ	2020-00-997-6034	97403	13213E5208	SLING,MULTIPLE LEG STERN LIFTING	EA	1
8	11	PAOZZ	5315-00-839-5822	96906	MS24665-353	PIN,COTTER LOCK BAR	EA	2
8	12	XBOZZ		97403	13213E5346	BAR,LOCK TOWING BITT	EA	1
8	13	XBOZZ		97403	13213E5348	BITT TOWING,STERN	EA	1
8	14	PAOZZ	5310-00-245-3504	96906	MS17828-8C	NUT SELF-LOCKING,CLAMP TOWING BITT	EA	6
8	15	PAOZZ	5310-00-167-0823	88044	AN960-816	WASHER,FLAT CLAMP TOWING BITT	EA	6
8	16	PAOZZ	5305-00-964-0589	96906	MS90725-115	SCREW CAP,HEXAGON,CLAMP TOWING BITT	EA	6
8	17	XBOZZ		97403	13213E5347	CLAMP TOWING BITT	EA	1
8	18	PAOZZ	5310-00-956-3150	96906	MS17828-14F	NUT SELF LOCKING,HEXAGON,7/8-14 IN	EA	4
8	19	PAOZZ	5310-00-809-8540	96906	MS27183-25	WASHER,FLAT U-BOLT,0.938 X 1.750 X 0.134 IN	EA	8
8	20	XBOZZ		97403	13213E5283-3	U-BOLT	EA	1
8	21	PAOZZ	5310-00-942-5183	96906	MS21083N14	NUT,SELF LOCKING HEXAGON,U-BOLT,7/8-14 IN	EA	4
8	22	PAOZZ	5310-00-031-0919	96906	MS17828-10F	NUT,SELF LOCKING HEXAGON,BAR LIFTING,5/8-18 IN	EA	4
8	23	PAOZZ	5310-00-823-8803	96906	MS27183-21	WASHER,FLAT BAR LIFTING 0.656 X 1.312 X 0.095 IN	EA	8
8	24	XBOZZ		97403	13213E5282	BAR,LIFTING	EA	2
8	25	PAOZZ	5310-00-925-9642	96906	MS21083N10	NUT,HEXAGON BAR LIFTING	EA	4
8	26	PAOZZ	5310-00-701-5786	96906	MS17828-6C	NUT,SELF LOCKING HEXAGON,3/8-16 IN	EA	1
8	27	PAOZZ	5310-00-080-6004	96906	MS27183-14	WASHER,FLAT COCKPIT STEP,0.416 X 0.812 X 0.065 IN.LG	EA	1
8	28	PAOZZ	5305-00-984-5691	96906	MS35206-311	SCREW,MACHINE COCKPIT STEP,3/8-16 X 1 IN.LG	EA	1
8	29	XBOZZ	2040-00-212-7859	97403	13213E5191	STEP,COCKPIT	EA	1
8	30	PAOZZ	5315-00-835-1948	97403	13213E5338	PIN,TOGGLE	EA	2
8	31	PAOZZ	2040-00-575-4787	97403	13213E5336	YOKE,CONNECTOR,BOW	EA	1
8	32	PAOZZ	5340-00-163-4713	97403	13213E5373	DRAIN PLUG STERN	EA	1
8	34	PAOZZ	2040-00-989-3268	97403	13213E5334	BASE,CLEAT	EA	8
8	36	XDOZZ		97403	13213E5332	CHOCK ASSY, HAUL BASE	EA	2
8	37	XDOZZ		97403	13213E5500	CHOCK ASSY, ROLLER PORT	EA	1
8	38	XDOZZ		97403	13213E5330	CHOCK ASSY,ROLLER STBD	EA	1

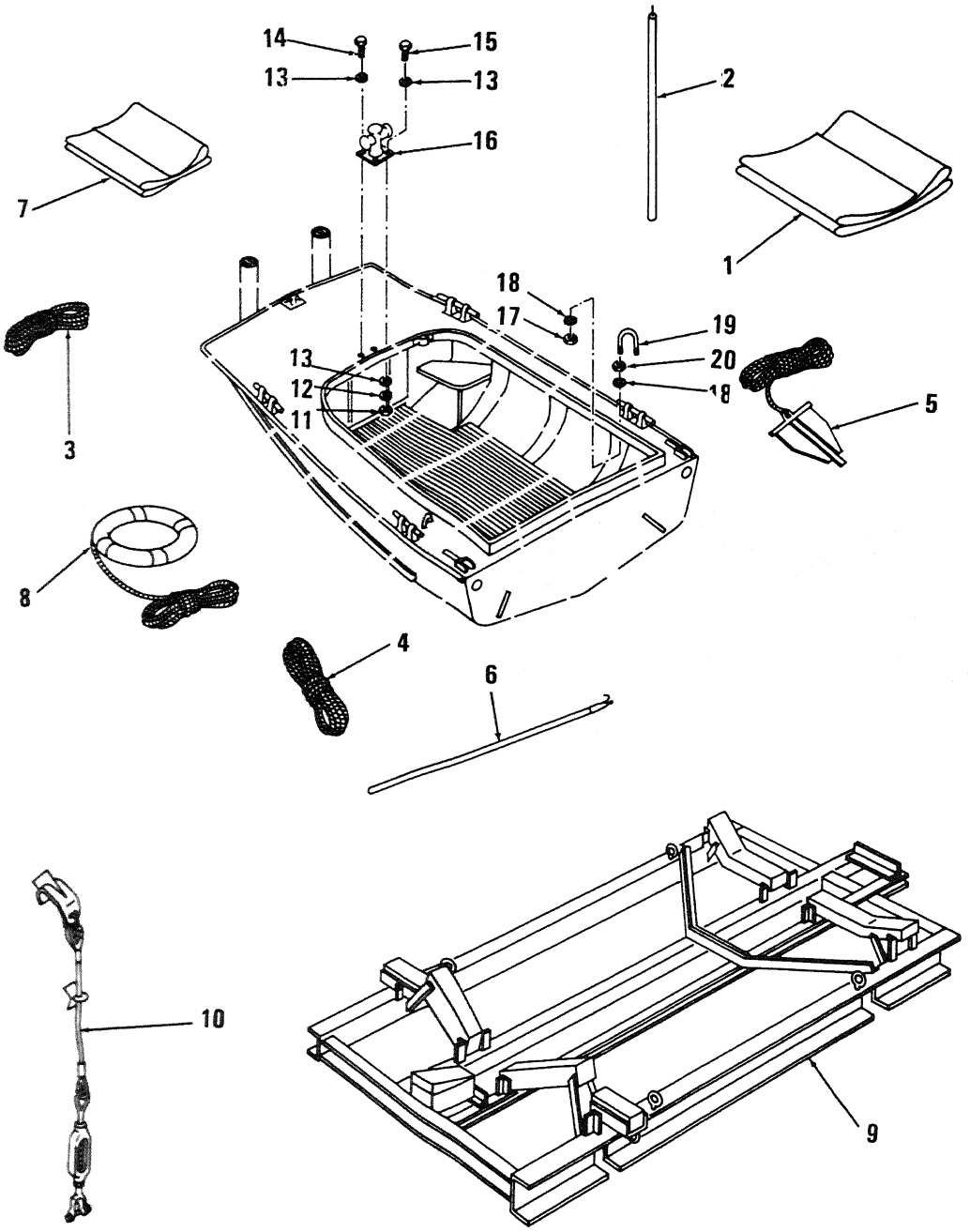

Figure 9. Bow Section Fittings, On-Board Equipment and Cradle

(1) ILLUSTRATION (a) FIG NO	(b) ITEM NO	(2) SMR CODE	(3) NATIONAL STOCK NUMBER	(4) FSCM	(5) PART NUMBER	(6) DESCRIPTION USABLE ON CODE	(7) U/M	(8) QTY INC IN UNIT
9	1	PAOZZ	2090-00-997-2049	97403	13213E5374	COVER,FORWARD WALKW FORWARD WALKWAY	EA	1
9	2	PAOZZ	2090-00-368-8194	97403	13213E5376	POLE ASSEMBLY,SUPPO	EA	1
9	3	PAOZZ	2030-00-997-6041	97403	13213E5510	LINE,STEERING	EA	2
9	4	PAOZZ	4020-00-033-4735	97403	13213E5511	FIBER ROPE ASSEMBLY	EA	4
9	5	PAOZZ	2040-00-997-6047	97403	13213E5513	ANCHOR AND ANCHOR LINE ASSEMBLY	EA	1
9	6	PAOZZ	2040-00-007-1136	97403	13216E9929	HOOK,BOAT	EA	1
9	7	PAOZZ	2090-00-997-6048	97403	13213E5375	COVER,COCKPIT	EA	1
9	8	PAOZZ	4220-00-275-3156	97403	13213E5468	RING,BUOY	EA	1
9	9	XBOZZ	2090-00-620-5524	97403	13213E5445	CRADLE,BOAT	EA	1
9	10	PAOZZ	2020-00-997-6033	97403	13213E5484	CABLE ASSEMBLY TIE DOWN ASSY,BOW	EA	4
9	11	PAOZZ	5310-00-768-0318	96906	MS51967-14	NUT HEXAGON,TOWING BITT	EA	4
9	12	PAOZZ	5310-00-584-5272	96906	MS35338-48	WASHER,LOCK TOWING BITT	EA	4
9	13	PAOZZ	5310-00-809-5998	96906	MS27183-18	WASHER,FLAT	EA	8
9	14	XDOZZ	5305-00-071-1770	96906	MS90725-116	SCREW,MACHINE	EA	2
9	15	PAOZZ	5305-00-050-1077	96906	MS90725-118	SCREW,MACHINE	EA	2
9	16	XBOZZ		79577	M3555-1-1-2	BITT TOWING,BOW	EA	1
9	17	XBOZZ		96906	MS172829-10C	NUT SELF-LOCKING HEXAGON,U-BOLT	EA	4
9	18	PAOZZ	5310-00-823-8803	96906	MS27183-21	WASHER,FLAT U-BOLT,0.556 X 1.312 X 0.095 IN	EA	8
9	19	XBOZZ		97403	13213E5283-1	U-BOLT	EA	2
9	20	PAOZZ	5310-00-763-8920	96906	MS51967-20	NUT,PLAIN,HEXAGON HEXAGON,U-BOLT,5/8-11 IN	EA	4
9	21	PAOZZ	2040-00-294-1263	97403	13213E5333	CHOCK,BOW	EA	4

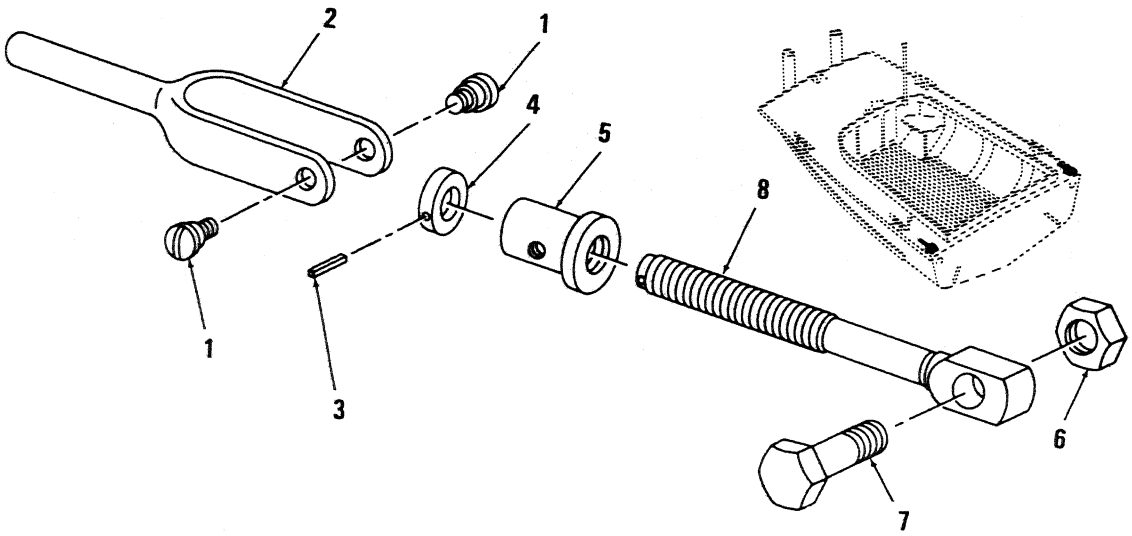

Figure 10. Coupling Arm

(1) ILLUSTRATION (a) FIG NO.	(b) ITEM NO.	(2) SMR CODE	(3) NATIONAL STOCK NUMBER	(4) FSCM	(5) PART NUMBER	(6) DESCRIPTION USABLE ON CODE	(7) U/M	(8) QTY INC IN UNIT
10	1	PAOZZ	5305-00-835-1957	97403	13213E5279	SCREW SHOULDER,COUPLING HANDLE.....	EA	4
10	2	PAOZZ	2040-00-997-6046	97403	13213E5277	HANDLE,COUPLING.....	EA	2
10	3	XBOZZ		96906	MS171536	PIN,SPRING COUPLING COLLAR MTG,0.125 X 1.250 IN.LG.....	EA	2
10	4	PAOZZ	3040-00-212-7928	97403	13213E5281	COLLAR,SHAFT.....	EA	2
10	5	PAOZZ	5310-00-353-4828	97403	13213E5278	NUT,PLAIN,ROUND.....	EA	2
10	6	PAOZZ	5310-00-956-3150	96906	MS17828-14F	NUT,SELF LOCKING COUPLING MTG SCREW,7/8-14 IN.....	EA	2
10	7	XDOZZ	5305-00-958-8461	96906	MS90726-215	SCREW,CAP COUPLING MTG,7/8-14 X 3-1/2 IN.LG.....	EA	2
10	8	PAOZZ	5306-00-835-1918	97403	13213E5276	BOLT,EYE COUPLING.....	EA	2

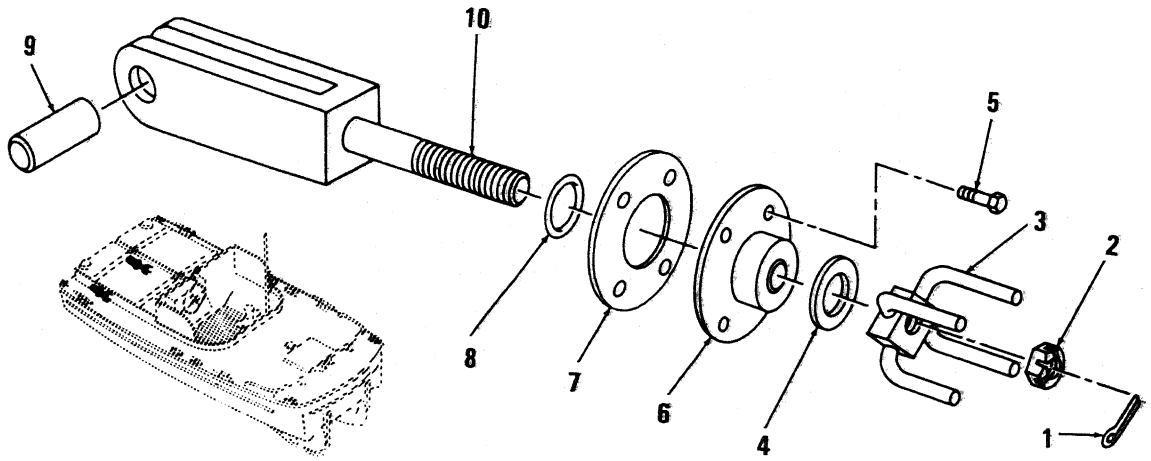

Figure 11. Coupling Yoke

(1) ILLUSTRATION (a) FIG NO.	(b) ITEM NO.	(2) SMR CODE	(3) NATIONAL STOCK NUMBER	(4) FSCM	(5) PART NUMBER	(6) DESCRIPTION USABLE ON CODE	(7) U/M	(8) QTY INC IN UNIT
11	1	PAOZZ	5315-00-013-7258	96906	MS24665-497	PIN,COTTER COUPLING YOKE NUT, 3/16 x 1-3/4 IN.LG.....	EA	2
11	2	XBOZZ		96906	13216E6806	NUT,RETAINING YOKE ADJUSTING.....	EA	2
11	3	XBOZZ		97403	13213E5262	NUT YOKE ADJUSTING,COUPLING YOKE.....	EA	2
11	4	XDOZZ	5310-00-233-7728	97403	13213E5270	WASHER,FLAT COUPLING YOKE NUT.....	EA	2
11	5	PAOZZ	5306-00-225-8499	96906	MS90725-34	SCREW,CAP PACKING RETAINER MTG,5/16-18 X 1 IN.LG.....	EA	4
11	6	XBOZZ		97403	13213E5260	RETAINER PACKING,ADJUSTING YOKE.....	EA	2
11	7	PAOZZ	5330-00-061-0549	97403	13213E5385	GASKET RETAINER PACKING.....	EA	2
11	8	PAOZZ	5330-00-198-6176	38044	AN6227-20	PACKING.PREFORMED COUPLING YOKE,1-1/16 X 1-5/16 X 1/8 IN.THK	EA	2
11	9	XBOZZ		97403	13213E5263	PIN,YOKE.....	EA	2
11	10	XBOZZ		97403	13213E5261	YOKE,COUPLING.....	EA	2

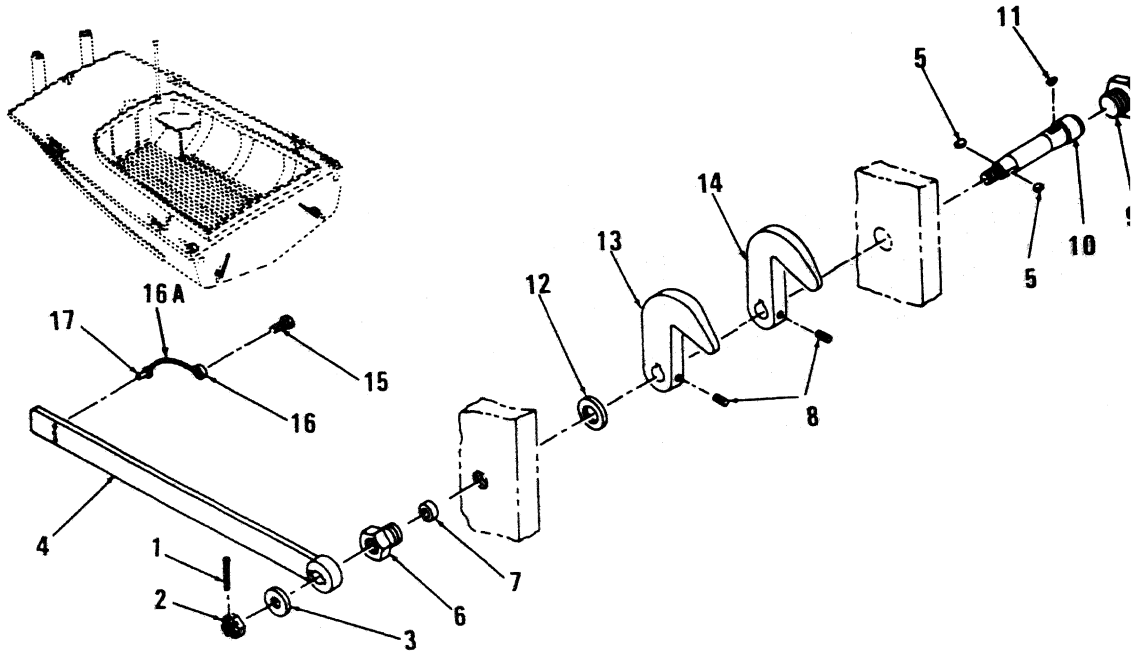

Figure 12. Coupling Hook

(1) ILLUSTRATION (a) FIG NO	(b) ITEM NO	(2) SMR CODE	(3) NATIONAL STOCK NUMBER	(4) FSCM	(5) PART NUMBER	(6) DESCRIPTION USABLE ON CODE	(7) U/M	(8) QTY INC IN UNIT
12	1	PAOZZ	5315-00-298-1481	96906	MS24665-357	PIN,COTTER HOOK HANDLE NUT,1/8 IN.DIA X 1-1/2 IN.LG.....	EA	2
12	2	PAOZZ	5310-00-998-0608	96906	MS35692-61	NUT,SLOTTED HEXAGON SHAFT HOOK,3/4-16 IN.....	EA	2
12	3	PAOZZ	5310-00-809-8533	96906	MS27183-23	WASHER,FLAT SHAFT HOOK,0.812 IN.ID X 1.469 IN.OD X 0.134 IN.THK.....	EA	2
12	4	XBOZZ	3040-00-304-3368	97403	13213E5267	LEVER,MANUAL CONTRO HOOK,SHAFT.....	EA	2
12	5	PAOZZ	5315-00-616-5522	96906	MS35756-12	KEY,WOODRUFF HANDLE HOOK,3/16 X 3/4 IN.....	EA	2
12	6	XBOZZ		97403	13213E5266	NUT,PACKING.....	EA	1
12	7	PAOZZ	5330-00-839-1749	97403	13213E5172-37	PACKING 1/4 IN.DIA.....	EA	2
12	8	PAOZZ	5305-00-724-5834	96906	MS51963-87	SETSCREW,HEXAGON PORT COUPLING HOOK,5/16-18 X 3/4 IN.LG....	EA	2
12	9	PAOZZ	5365-01-091-4044	97403	13213E5259	PLUG,HOUSING.....	EA	1
12	10	PAOZZ	2040-00-997-9764	97403	13213E5268	SHAFT,HOOK,STARBOAR.....	EA	2
12	11	PAOZZ	5315-00-616-5527	96906	MS35756-18	KEY,WOODRUFF PORT COUPLING.....	EA	2
12	12	XBOZZ		97403	13213E5271	WASHER HOOK SHAFT.....	EA	2
12	13	PAOZZ	2040-00-989-3267	97403	13213E5264	HOOK,COUPLING COUPLING,STARBOARD.....	EA	1
12	14	PAOZZ	2040-00-374-2749	97403	13213E5265	HOOK,COUPLING,PORT COUPLING,PORT.....	EA	1
12	15	PAOZZ	5305-00-984-6193	96906	MS35206-245	SCREW,MACHINE.....	EA	2
12	16	MOOZZ		81349	RRC271TYPE2	CHAIN SINGLE JACK MANUFACTURE FROM.....	EA	2
12	16A	PAOZZ	4010-00-262-1551	80244	42C14155-1	.CHAIN,WELDLESS 6 IN.....	FT	V
12	17	PAOZZ	5340-00-097-4258	96906	MS17988-516	PIN QUICK RELEASE.....	EA	2

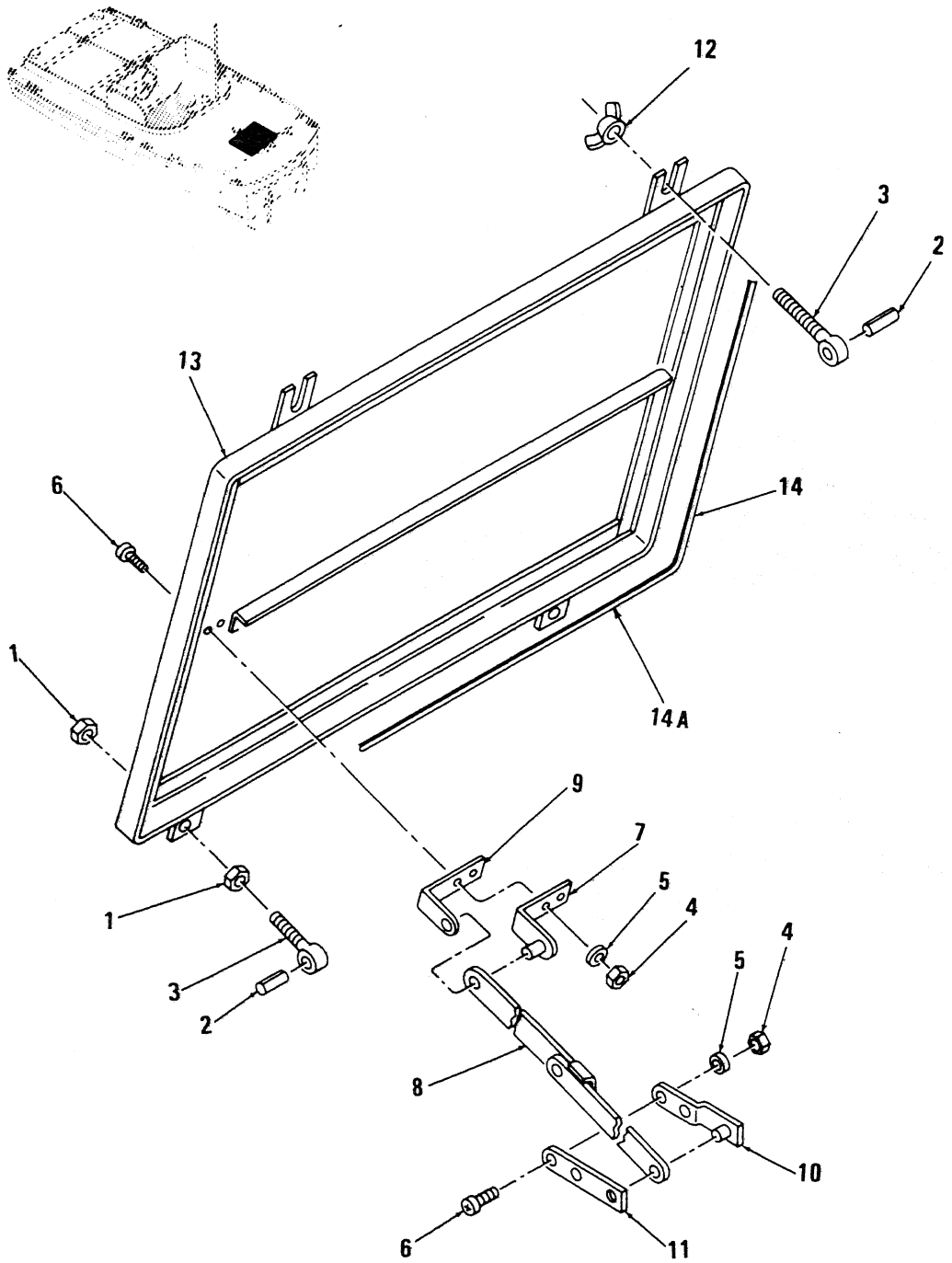

Figure 13. Stern Hatch Cover

(1) ILLUSTRATION (a) FIG NO.	(b) ITEM NO.	(2) SMR CODE	(3) NATIONAL STOCK NUMBER	(4) FSCM	(5) PART NUMBER	(6) DESCRIPTION USABLE ON CODE	(7) U/M	(8) QTY INC IN UNIT
						GROUP 03 ACCESS AND HATCH COVER		
13	1	PAOZZ	5310-00-701-5786	96906	MS17828-6C	NUT,SELF LKG HEXAGON,HATCH COVER,STERN,3/8-16 IN.THD SIZE BOLT.....	EA	4
13	2	PAOZZ	5315-00-597-3693	96906	MS171648	PIN,SPRING STERN HATCH COVER,0.250 DIA X 0.625 IN.LG.....	EA	8
13	3	XBOZZ	5306-00-834-8533	96906	13213E5189-2	BOLT,DROP STERN HATCH COVER,3/8-16 IN.THD SIZE.....	EA	8
13	4	XBOZZ	5310-00-483-8792	96906	M24129-2-4C	NUT,SELF LKG HEXAGON,HINGE PLATES,STERN HATCH COVER,1/4-20 IN.SCREW SIZE.....CCC	EA	4
13	5	PAOZZ	5310-00-809-4058	96906	MS27183-10	WASHER,FLAT RD HD,HINGE PLATES,STERN HATCH COVER,0.281 ID X 0.625 OD X 0.065 IN.THK.....	EA	4
13	6	PAOZZ	5305-00-988-1726	MS35206-282		SCREW,MACHINE PAN HEAD,HINGE PLATES,STERN HATCH COVER,1/4-20 X 7/8 IN.....	EA	4
13	7	XBOZZ		97403	13213E5194	PLATE HINGE,STERN HATCH COVER.....	EA	1
13	8	PAOZZ	5340-00-041-2443	97403	13213E5203	BRACE HINGE PLATE,STERN HATCH.....	EA	1
13	9	PBOZZ		97403	13213E5195	PLATE HINGE,STERN HATCH COVER.....	EA	1
13	10	XBOZZ		97403	13213E5196	PLATE HINGE,STERN HATCH COVER.....	EA	1
13	11	PBOZZ		97403	13213E5197	PLATE HINGE,STERN HATCH COVER.....	EA	1
13	12	PAOZZ	5310-00-889-2606	96906	MS35425-42	NUT,WING,PLAIN STERN HATCH COVER,3/8-16 IN.BOLT SIZE.....	EA	2
13	13	XBOZZ	2040-00-374-2724	97403	13213E5178	COVER,STERN HATCH HATCH,STERN.....	EA	1
13	14	MOOZZ		97403	13212E5178-5	.GASKET,COVER STERN HATCH MANUFACTURE FROM.....	EA	1
13		XDOZZ	9320-00-900-6746	81349	MILR6130TYPE1	..RUBBER 3/16 IN.THK,3/4 IN.WIDE,50 FT LONG.....	RL	1

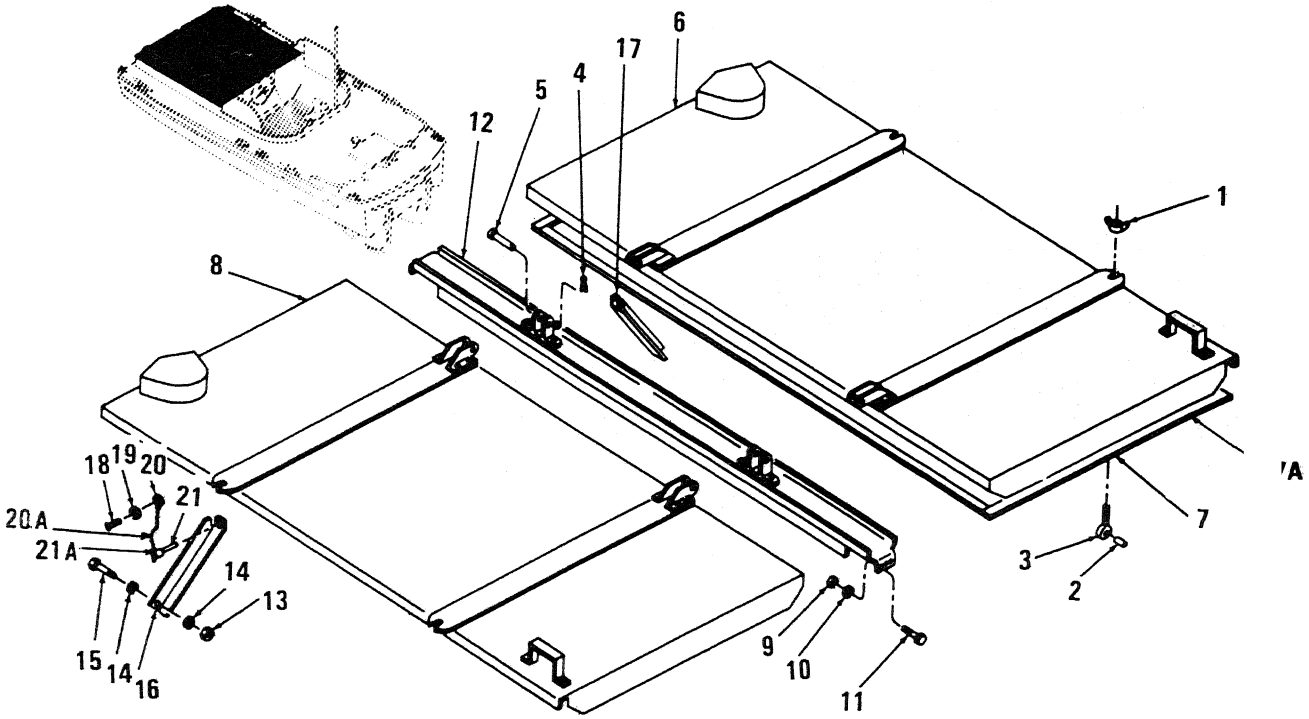

Figure 14. Engine Hatch Covers

(1) ILLUSTRATION (a) FIG NO.	(b) ITEM NO	(2) SMR CODE	(3) NATIONAL STOCK NUMBER	(4) FSCM	(5) PART NUMBER	(6) DESCRIPTION USABLE ON CODE	(7) U/M	(8) QTY INC IN UNIT
14	1	PAOZZ	5310-00-889-2606	96906	MS35425-42	NUT,WING DROP BOLT,3/8-16 IN.....	EA	4
14	2	PAOZZ	5315-00-597-3693	96906	MS171648	PIN,SPRING DROP BOLT,0.250 IN.DIA X 0.625 IN.LG.....	EA	4
14	3	PAOZZ	5306-00-834-8533	97403	13213E5189-2	BOLT,MACHINE DROP,ENGINE COVER MTG.....	EA	4
14	4	PAOZZ	5315-00-816-1794	96906	MS24665-285	PIN,COTTER 0.094 IN.X 1 IN.LG.....	EA	2
14	5	PAOZZ	5315-00-903-5931	96906	MS20392-5C63	PIN,STRAIGHT,HEADED STRAIGHTHEADED,ENGINE COVER MTG,3/8 X 1-31/32 IN.LG.....	EA	2
14	6	XBOZZ		97403	13219E1162	COVER ENGINE HATCH,PORT.....	EA	2
14	7	MOOZZ		97403	13219E1161-13	.GASKET COVER,ENGINE HATCH PORT AND STBD MANUFACTURE FROM..	EA	2
14	7A	XDOZZ	9320-00-900-6746	81349	MILR6130TYPE1	..RUBBER 3/16 IN.THK,3/4 IN.WIDE,50 FT LONG.....	RL	2
14	8	XBOZZ		87403	13219E1161	COVER ENGINE HATCH,STARBOARD COMPONENTS SAME AS COVER PART NO. 13213E1162 (97403).....	EA	2
14	9	PAOZZ	5310-00-031-0920	96906	MS17828-4C	NUT,SELF LOCKING HATCH COVER SUPPORT SCREW,1/4-20 IN.....	EA	6
14	10	PAOZZ	5310-00-809-4058	96906	MS27183-10	WASHER,FLAT HATCH COVER SUPPORT SCREW,0.281 X 0.625 X 0.065 IN.THK.....	EA	6
14	11	XBOZZ	5305-00-068-0502	97403	MS90725-6	SCREW,CAP HEXAGON HEAD HATCH COVER SUPPORT MTG,1/4-20 X 3/4 IN.....	EA	6
14	12	XBOZZ		97403	13213E5205	SUPPORT ENGINE HATCH COVER.....	EA	6
14	13	PAOZZ	5310-00-409-3701	96906	MS17828-5C	NUT,SELF LOCKING ENGINE HATCH SUPPORT,5/16-18 IN.....	EA	7
14	14	PAOZZ	5310-00-081-4219	96906	MS27183-12	WASHER,FLAT ENGINE HATCH COVER SUPPORT,0.344 X 0.688 C 0.065 IN.....	EA	14
14	15	PAOZZ	5306-00-225-8499	96906	MS90725-34	SCREW,CAP ENGINE HATCH COVER SUPPORT MTG,5/16-18 X 1 IN.LG.	EA	7
14	16	XBOZZ		97403	13213E5192	SUPPORT ENGINE HATCH COVER,STBD.....	EA	2
14	17	XBOZZ		97403	13213E5193	SUPPORT ENGINE HATCH COVER,PORT.....	EA	2
14	18	PAOZZ	5305-00-989-7435	96906	MS35207-264	SCREW,MACHINE SINGLE JACK CHAIN MTG,10-32 X 5/8 IN.LG.....	EA	4
14	19	PAOZZ	5310-00-809-8546	96906	MS27183-8	WASHER,FLAT SINGLE JACK CHAIN,0.219 X 0.438 X 0.049 IN.....	EA	4
14	20	MOOZZ		81349	RRC271TYPEII	CHAIN,SINGE JACK 0.062 MANUFACTURE FROM.....	EA	4
14	20A	PAOZZ	4010-00-262-1551	80244	42C14155-1	.CHAIN WELDLESS 6 IN.REQUIRED.....	FT	V
14	21	PAOZZ	5340-00-019-9512	96906	MS17988C620	PIN,QUICK RELEASE ENGINE COVER TO SUPPORT,3/8 X 2 IN.LG....	EA	4
14	21A	PAOZZ	5320-00-245-4360	96906	MS20470B6-14	.RIVET,SOLID,BRACKET.....	EA	8

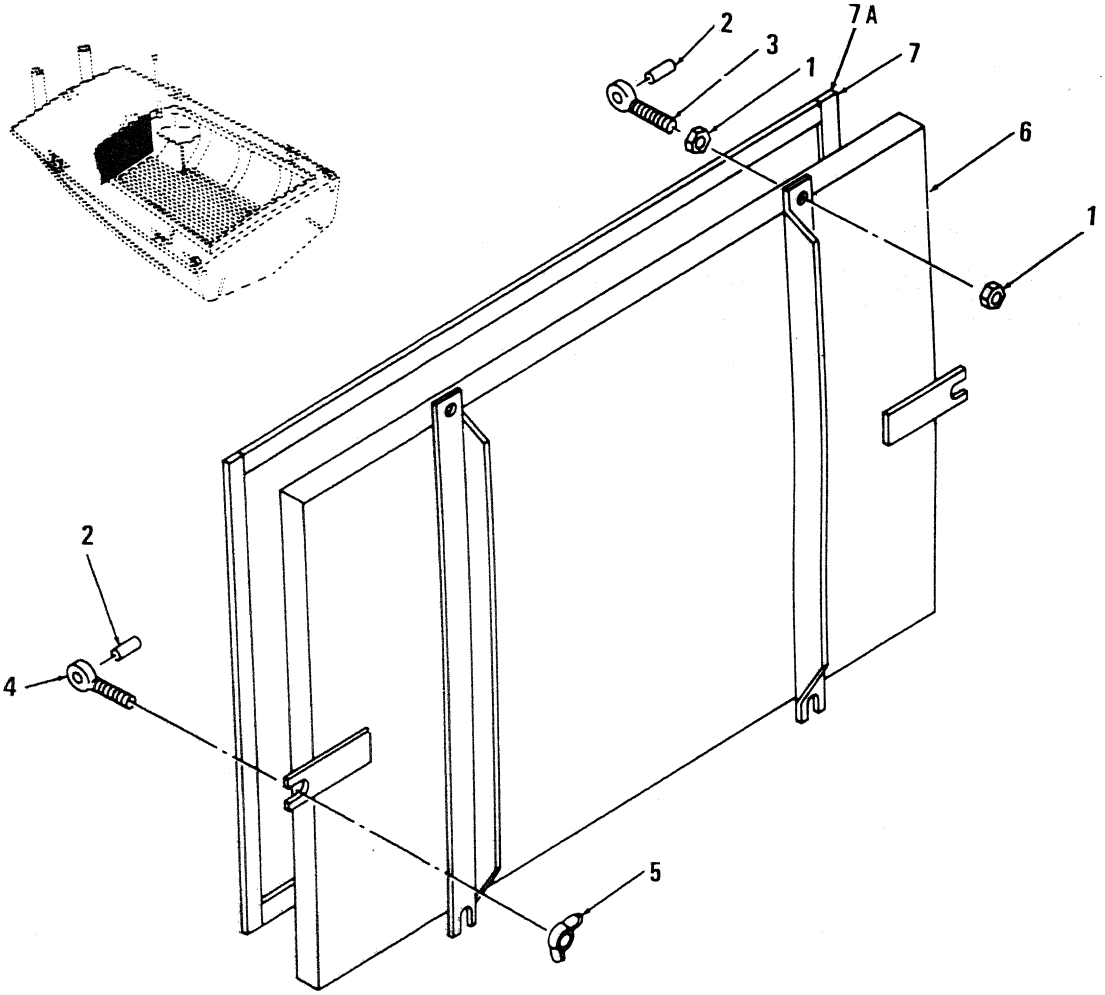

Figure 15. Bow Hatch Cover

(1) ILLUSTRATION (a) FIG NO.	(b) ITEM NO.	(2) SMR CODE	(3) NATIONAL STOCK NUMBER	(4) FSCM	(5) PART NUMBER	(6) DESCRIPTION USABLE ON CODE	(7) U/M	(8) QTY INC IN UNIT
15	1	PAOZZ	5310-00-701-5786	96906	MS17828-6C	NUT,SELF LOCKING BOW HATCH COVER MTG,3/8-16 IN.....	EA	4
15	2	PAOZZ	5315-00-844-0342	96906	MS16562-250	PIN,SPRING DROP BOLT MTG,0.250 C 0.750 IN.LG.....	EA	6
15	3	XBOZZ		97403	13213E5189-1	BOLT,DROP BOW HATCH COVER.....	EA	2
15	4	XBOZZ	5306-00-834-8533	97403	13213E5189-2	BOLT,EYE BOW HATCH COVER.....	EA	4
15	5	PAOZZ	5310-00-889-2606	96906	MS35425-42	NUT,WING DROP BOLT,3/8-16 IN.....	EA	4
15	6	XBOZZ	2040-00-374-2723	97403	13213E5177	COVER,BOW HATCH HATCH,BOW.....	EA	1
15	7	MOOZZ		97403	13213E5177-4	.GASKET BOW HATCH COVER MANUFACTURE FROM.....	EA	1
15	7A	XDOZZ	9320-00-900-6746	81349	MILR6130TYPE1	.RUBBER 3/16 IN.THK,3/4 IN.WIDE,50 FT LONG.....	RL	1

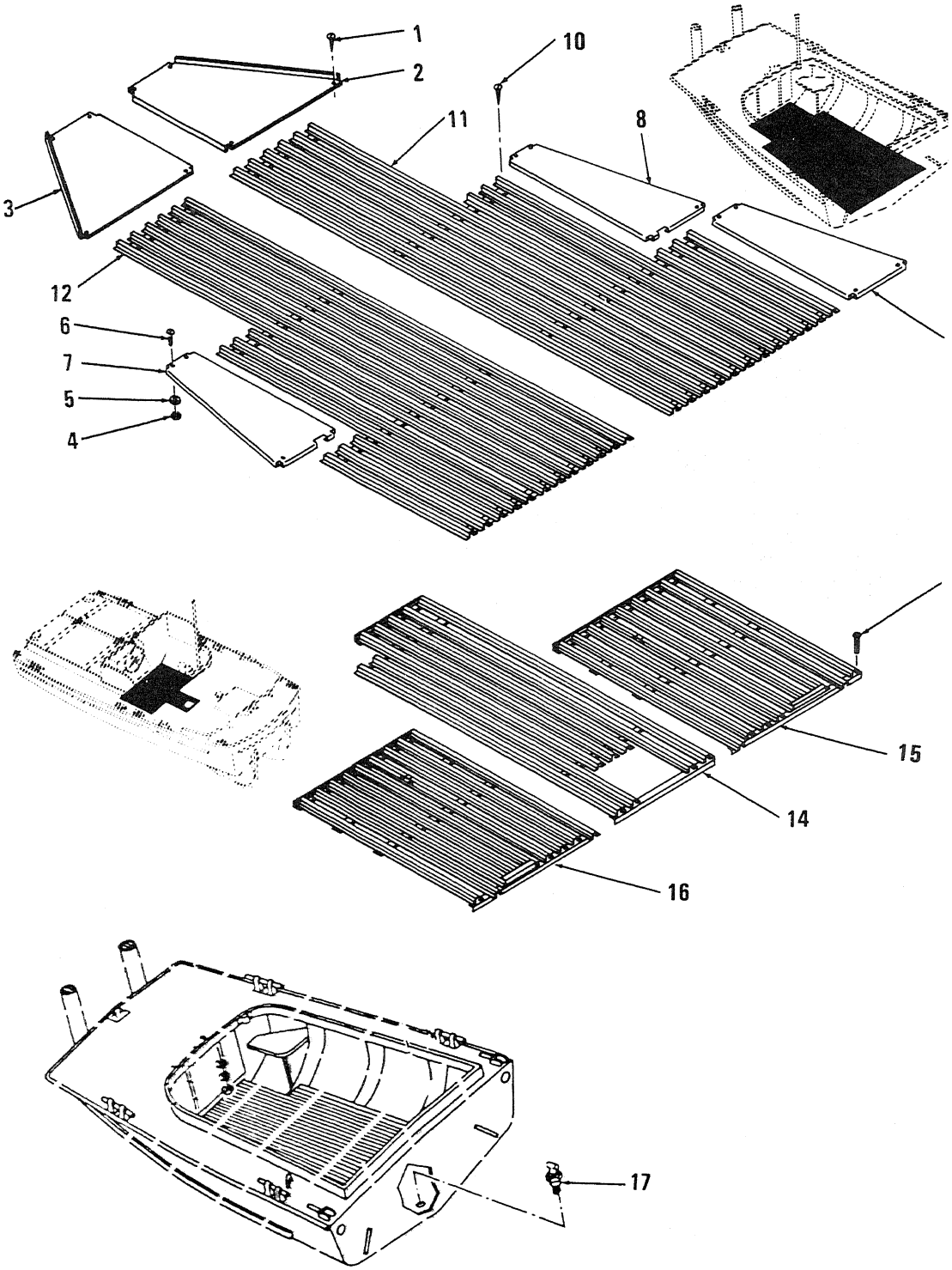

Figure 16. Flooring and Storage Shelves

(1) ILLUSTRATION (a) FIG NO.	(b) ITEM NO.	(2) SMR CODE	(3) NATIONAL STOCK NUMBER	(4) FSCM	(5) PART NUMBER	(6) DESCRIPTION USABLE ON CODE	(7) U/M	(8) QTY INC IN UNIT
16	13	PAOZZ	5305-00-052-6921	96906	MS24629-57	SCREW,MACHINE PAN HEAD GRATING COCKPIT.....	EA	6
16	17	PAOZZ	5340-00-163-4713	97403	13213E5373	PLUG DRAIN,BOW.....	EA	1

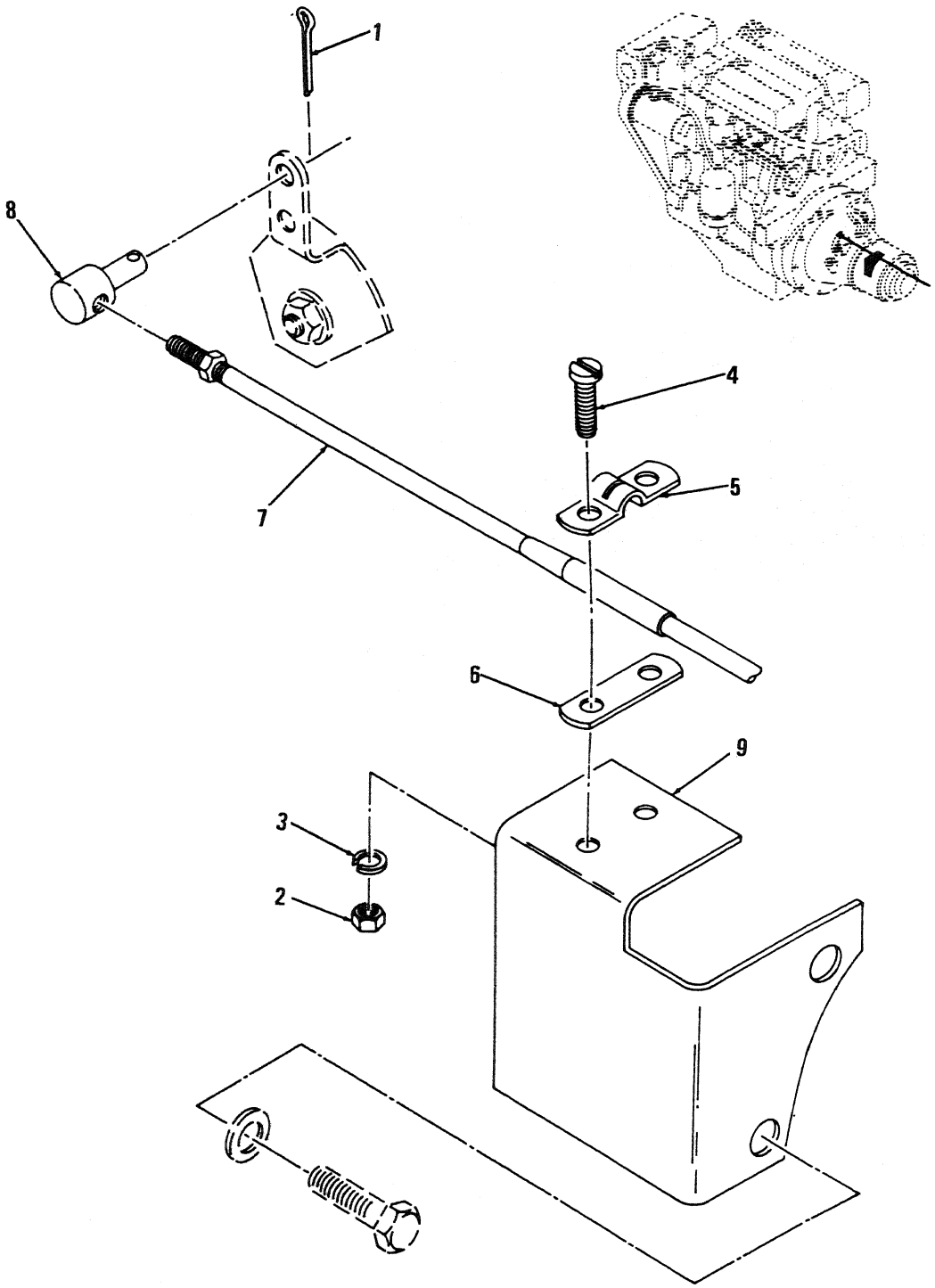

Figure 17. Transmission Cable and Bracket Kit

(1) ILLUSTRATION (a) FIG NO.	(b) ITEM NO.	(2) SMR CODE	(3) NATIONAL STOCK NUMBER	(4) FSCM	(5) PART NUMBER	(6) DESCRIPTION USABLE ON CODE	(7) U/M	(8) QTY INC IN UNIT
						GROUP 04 CONTROLS		
17	1	PAOZZ	5310-00-187-9376	96906	MS24665-315	PIN,COTTER.....CCC	EA	2
17	2	PAOZZ	5310-00-934-9751	96906	MS35650-302	NUT,HEXAGON.....CCC	EA	4
17	3	PAOZZ	5310-00-576-5752	96906	MS35333-39	WASHER,LOCK.....CCC	EA	4
17	4	PAOZZ	5305-00-989-7435	96906	MS35207-264	SCREW,MACHINE.....CCC	EA	4
17	5	XAOZZ		41625	A31509	CLAMP.....CCC	EA	2
17	6	XBOZZ		41625	A31538	SHIM.....CCC	EA	2
17	7	PAOZZ	3040-00-229-2640	97403	13219E1135-3	CABLE,CONTROL THROT 75 IN.LG COMPONENTS SAME AS CABLE,STOCK NO.....CCC	EA	2
17	7	PAOZZ	3040-00-009-3376	97403	13219E1135-4	CONTROL ASSEMBLY,PU 63 IN.LG.....CCC	EA	2
17	8	XBOZZ		41625	A31539	.PIVOT.....CCC	EA	2
17	9	XBOZZ		41625	D33590	.BRACKET.....CCC	EA	2

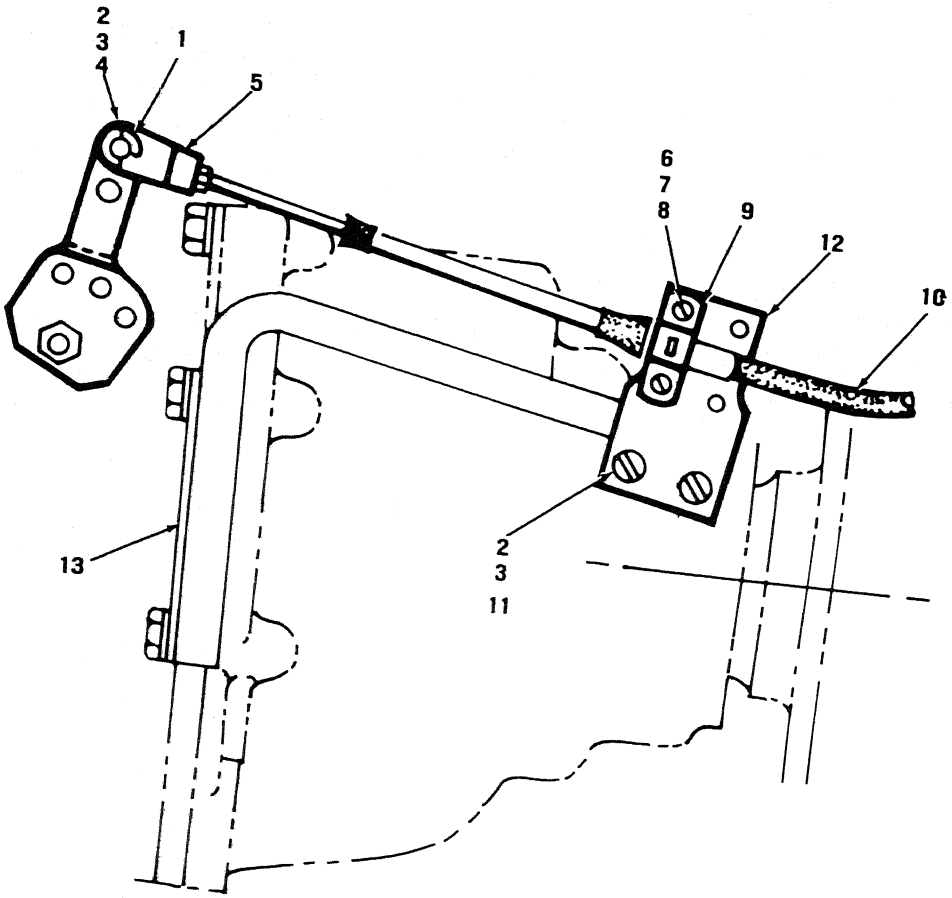

Figure 17A. Transmission Cable and Bracket Kit

(1) ILLUSTRATION (a) FIG NO	(b) ITEM NO	(2) SMR CODE	(3) NATIONAL STOCK NUMBER	(4) FSCM	(5) PART NUMBER	(6) DESCRIPTION USABLE ON CODE	(7) U/M	(8) QTY INC IN UNIT
17A	1	KFOZZ		41625	E-5-16C	E RING 5-16 INCH NOM.....CUA,CUB,CUC	EA	1
17A	2	KFOZZ		41625	A50901-016	NUT,PLAIN,HEXAGON 1-4 INCH-28.....CUA,CUB,CUC	EA	3
17A	3	KFOZZ		41625	A50803-077	WASHER,LOCK 1-4 INCH ID PART OF KIT P/N A301474..CUA,CUB,CUC	EA	3
17A	4	KFOZZ		41625	A300965	PIN PIVOT PART OF KIT PN A301474 PART OF KIT P/N A301474.....	EA	1
17A	5	KFOZZ		41625	A300646	TERMINAL PART OF KIT PN A301474 PART OF KIT P/N A301474..... CUA,CUB,CUC	EA	2
17A	6	KFOZZ		41625	A50112-569	SCREW FILLET HEAD NUMBER 1032X304 INCH PART OF KIT PN A301474.....CUA,CUB,CUC	EA	2
17A	7	KFOZZ		41625	A40803-059	WASHER LOCK NUMBER 10 PART OF KIT P/N A301474....CUA,CUB,CUC	EA	2
17A	8	KFOZZ		41625	A50900-076	NUT,PLAIN,HEXAGON NUMBER 10-32 PART OF KIT P/N A301474..... CUA,CUB,CUC	EA	2
17A	9	KFOZZ		41625	A31509	CLAMP PART OF KIT PN A301474 PART OF KIT P/N A301474..... CUA,CUB,CUC	EA	2
17A	10	PAOZZ	3040-00-229-2640	97403	13219E1135-3	CABLE,CONTROL THROT 75 IN LG.....CUA,CUB,CUC	EA	1
17A	10	PAOZZ	3040-00-009-3376	97403	13219E1135-4	CONTROL ASSEMBLY,PU 63 IN LG.....CUA,CUB,CUC	EA	1
17A	11	KFOZZ		41625	A50146-561	SCREW,MACHINE ROUND HEAD 1-4 INCH-28X 5-8 INCH LONG PART OF KIT PN A301474.....CUA,CUB,CUC	EA	2
17A	12	KFOZZ		41625	A21600	BRACKET CLAMP PART OF KIT P/N A301474.....CUA,CUB,CUC	EA	1
17A	13	KFOZZ		41625	B301477	BRACKET CABLE MOUNT PART OF KIT P/N A301474.....CUA,CUB,CUC	EA	1
17A		PAOZZ	2010-01-105-2060	41625	A301474	KIT,BRACKET TRANSMISSION CABLE.....CUA,CUB,CUC	EA	1
17A	1					E RING	EA	1
17A	2					NUT,PLAIN,HEXAGON	EA	3
17A	3					WASHER,LOCK	EA	3
17A	4					PIN PIVOT	EA	1
17A	5					TERMINAL	EA	2
17A	6					SCREW	EA	2
17A	7					WASHER,LOCK	EA	2
17A	8					NUT,PLAIN,HEXAGON	EA	2
17A	9					CLAMP	EA	2
17A	11					SCREW,MACHINE	EA	2
17A	12					BRACKET CLAMP	EA	1
17A	13					BRACKET CABLE MOUNT	EA	1

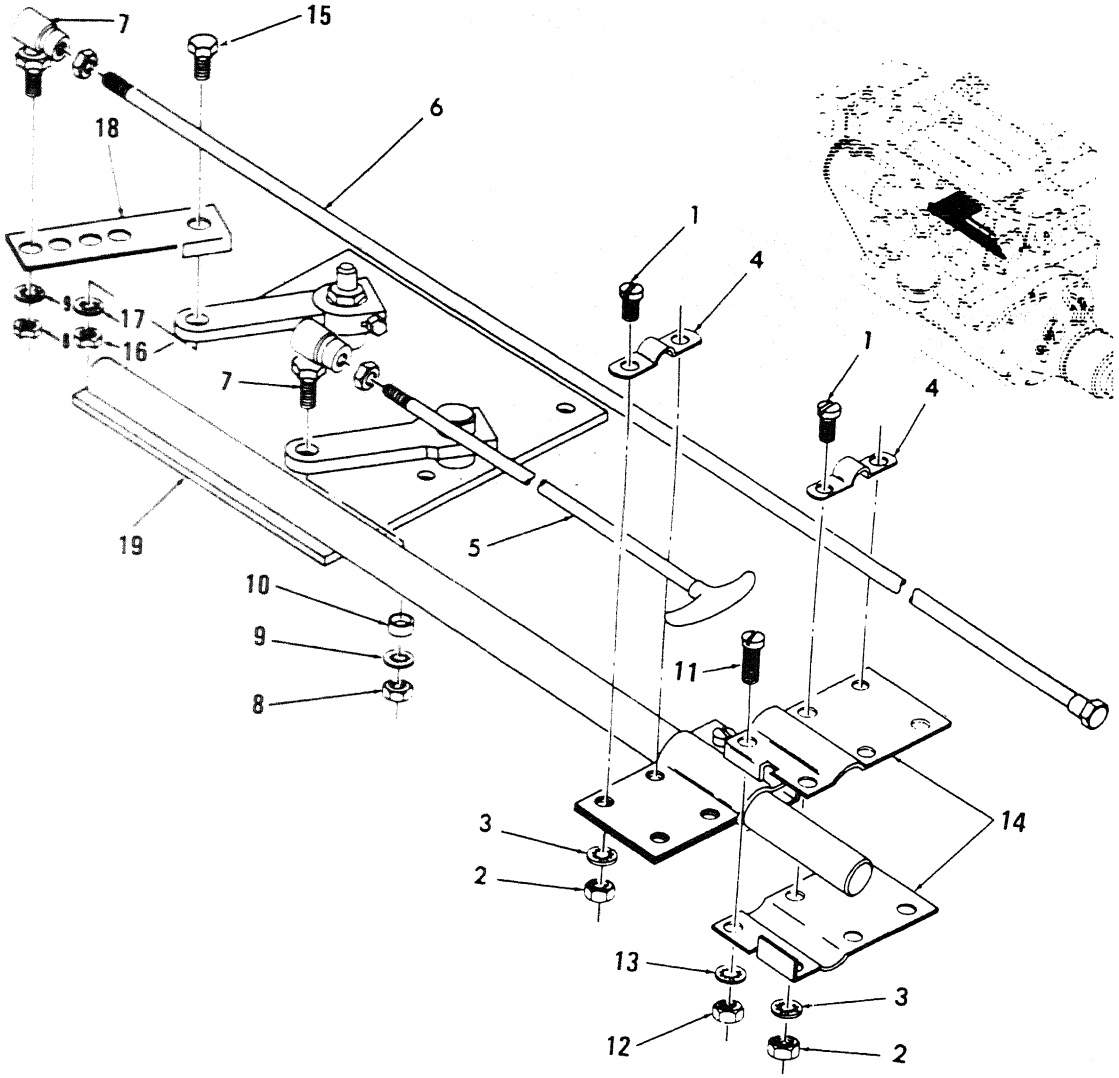

Figure 18. Governor Control Cables and Bracket Kit

(1) ILLUSTRATION (a) FIG NO.	(b) ITEM NO.	(2) SMR CODE	(3) NATIONAL STOCK NUMBER	(4) FSCM	(5) PART NUMBER	(6) DESCRIPTION USABLE ON CODE	(7) U/M	(8) QTY INC IN UNIT
18	1	XBOZZ		96906	MS35191-213	SCREW FILISTER HEAD	EA	8
18	2	PAOZZ	5310-00-934-9765	96906	MS35650-304	NUT,HEXAGON	EA	8
18	3	PAOZZ	5310-00-933-8120	96906	MS35338-138	WASHER,LOCK	EA	8
18	4	PBOZZ	2030-00-933-1630	41625	A31509	CLAMP	EA	4
18	5	XBOZZ	3040-00-233-8913	97403	13219E1136-1	CABLE,CONTROL STOP SHUT-OFF,PORT	EA	1
18		XBOZZ		97403	13219E3482-105	NAMEPLATE,PORT CUA,CUB,CUC	EA	2
18	5	PAOZZ	3040-00-229-2635	97403	13219E1136-2	CABLE,CONTROL STOP SHUT-OFF STBD	EA	1
18	6	PAOZZ	3040-00-233-8912	97403	13219E1135-1	CABLE,CONTROL THROT THROTTLE,PORT	EA	1
18	6	PAOZZ	3040-00-233-8915	97403	13219E1135-2	CABLE,CONTROL THROT THROTTLE,STBD	EA	1
18	7	PAOZZ	3040-00-051-5225	41625	A31126	.BALL JOINT,TERMINAL	EA	4
18	8	PAOZZ	5310-00-400-5503	96906	MS35650-3254	.NUT,HEXAGON 1/4 X 28	EA	4
18	9	PAOZZ	5310-00-933-8121	96906	MS35338-139	.WASHER,LOCK	EA	4
18	10	XBOZZ		41625	A38635	.BUSHING	EA	2
18	11	PAOZZ	5305-00-993-2738	96906	MS35207-280	.SCREW,MACHINE ROUND HEAD	EA	8
18	12	PAOZZ	5310-00-400-5503	96906	MS35650-3254	.NUT,HEXAGON	EA	8
18	13	PAOZZ	5310-00-933-8121	96906	MS35338-139	.WASHER,LOCK	EA	8
18	14	XBOZZ		41625	A21600	.BRACKET CABLE SUPPORT	EA	4
18	15	XDOZZ	5306-00-225-9087	96906	MS90726-32	.BOLT,HEXAGON	EA	2
18	16	PAOZZ	5310-00-252-8748	96906	MS35650-3314	.NUT,HEXAGON	EA	2
18	17	PAOZZ	5310-00-058-3135	96906	MS35336-35	.WASHER,LOCK	EA	2
18	18	XBOZZ		41625	B41331	.LEVER,EXTENSION	EA	2
18	19	XBOZZ		41625	A61313	.ANCHOR,BRACKET	EA	2

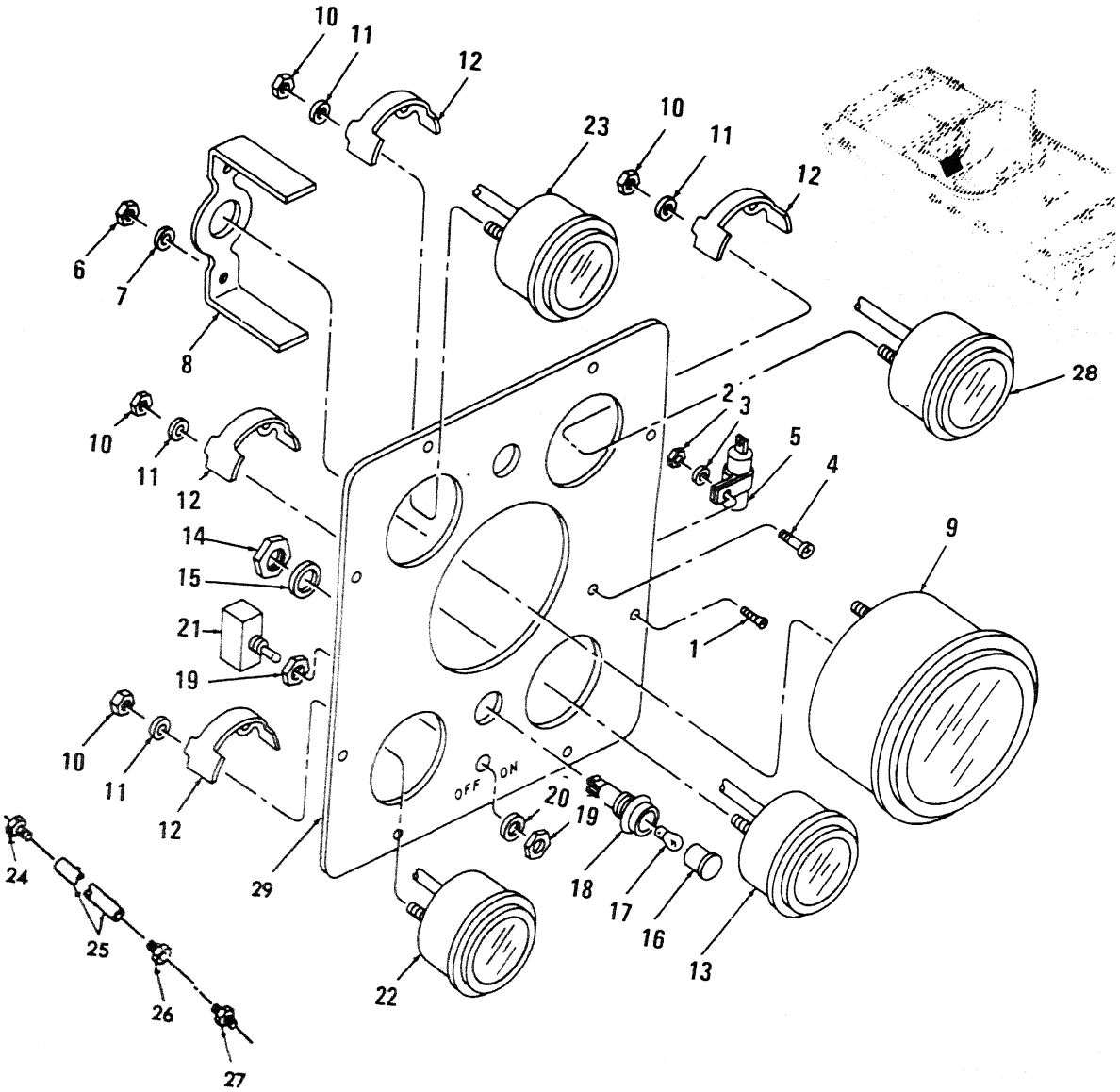

Figure 19. Instrument Panel

(1) ILLUSTRATION (a) FIG NO	(b) ITEM NO	(2) SMR CODE	(3) NATIONAL STOCK NUMBER	(4) FSCM	(5) PART NUMBER	(6) DESCRIPTION USABLE ON CODE	(7) U/M	(8) QTY INC IN UNIT
						GROUP 05 INSTRUMENT PANEL		
19	1	PAOZZ	5305-00-016-6330	96906	MS24526-46	SCREW MACHINE,INSTRUMENT PANEL,10-24 X 3/8 IN.LG.....CCC,CUA	EA	8
19	2	PAOZZ	5310-00-811-3494	96906	MS21044N08	NUT,SELF-LOCKING CAMACITOR,8-32 X 5/8 IN.LG.....CCC,CUA	EA	2
19	3	PAOZZ	5310-00-809-8544	96906	MS27183-7	WASHER,FLAT CAPACITOR,0.187 ID X 0.375 OD X 0.049 IN.THK..... CCC,CUA	EA	2
19	4	PAOZZ	5305-00-958-5477	96906	MS35190-254	SCREW,MACHINE CAPACITOR,8-32 X 5/8 IN.LG.....CCC.CUA	EA	2
19	5	PAOZZ	5910-00-160-4802	81349	CA33KFB504	CAPACITOR INSTRUMENT PANEL.....CCC,CUA	EA	1
19	6	PAOZZ	5310-00-934-9751	96906	MS35650-302	NUT,HEXAGON BRACKET.....	EA	4
19	7	PAOZZ	5310-00-045-3296	24617	453296	WASHER,LOCK BRACKET.....	EA	4
19	8	XAOZZ		24617	1580377	BRACKET..... CCC	EA	2
19	9	PAOZZ	6680-00-825-2076	96906	ms35916-2	TACHOMETER.....	EA	2
19	10	XBOZZ		96906	MS20144N3	NUT,HEXAGON RETAINING CLAMP.....	EA	16
19	11	PAOZZ	5310-00-809-8546	96906	MS27183-8	WASHER,FLAT RETAINING CLAMP.....	EA	16
19	13	PAOZZ	6625-00-025-9053	24617	6473954	AMMETER INSTRUMENT PANEL.....	EA	2
19	14	PAOZZ	5310-00-897-6080	96906	MS35691-27	NUT,HEXAGON LIGHT.....	EA	4
19	15	PAOZZ	5310-00-058-3608	96906	MS35335-64	WASHER,FLAT LIGHT.....	EA	4
19	16	PAOZZ	6210-00-001-1436	72619	22-2900-200	SHIELD,LAMP.....	EA	4
19	17	PAOZZ	6240-00-155-8714	96906	MS25231-313	LAMP,INCANDESCENT.....	EA	4
19	18	PAOZZ	6210-00-842-0168	72619	22-1310-2900-201	LIGHT,PANEL LIGHT.....	EA	4
19	19	PAOZZ	5310-00-811-3494	96906	MS21044N08	NUT,HEXAGON SWITCH.....	EA	2
19	20	PAOZZ	5310-00-809-8544	96906	MS27183-7	WASHER,FLAT SWITCH.....	EA	2
19	21	PAOZZ	5930-00-655-1514	96906	MS35058-22	SWITCH,TOGGLE.....	EA	2
19	22	PAOZZ	6620-00-139-3800	70040	25025308	GAGE OIL PRESSURE ENGINE.....	EA	2
19	23	PAOZZ	6685-00-106-9610	70040	25025312	GAGE,PRESSURE,DIAL OIL PRESSURE TRANSMISSION.....	EA	1
19	24	PAOZZ	4730-00-287-1784	87373	30182-2-4B	.ADAPTER,STRAIGHT TRANS AND ENG OIL PRESSURE GAGE LINE..... CUA, CUB,CUC	EA	4
19	25	PAOZZ	4720-00-847-1710	45681	831-4	.HOSE,NONMETALLIC.....CUA,CUB,CUC	FT	15
19	26	XBOZZ		45681	30882-4-4B	.FITTING,SWIVEL TRANS AND ENG OIL PRESSURE GAGE.....	EA	4
19	27	PAOZZ	4730-00-090-0832	96906	MS39159-3	.ADAPTER,TUBE TRANS OIL PRESS GAGE.....CUA,CUB,CUC	EA	2
19	28	PAOZZ	6685-00-194-1710	24617	6490264	GAGE WATER TEMPERATURE.....	EA	2
19	29	XBOZZ		97403	13213E5467	PANEL,INSTRUMENT.....	EA	2

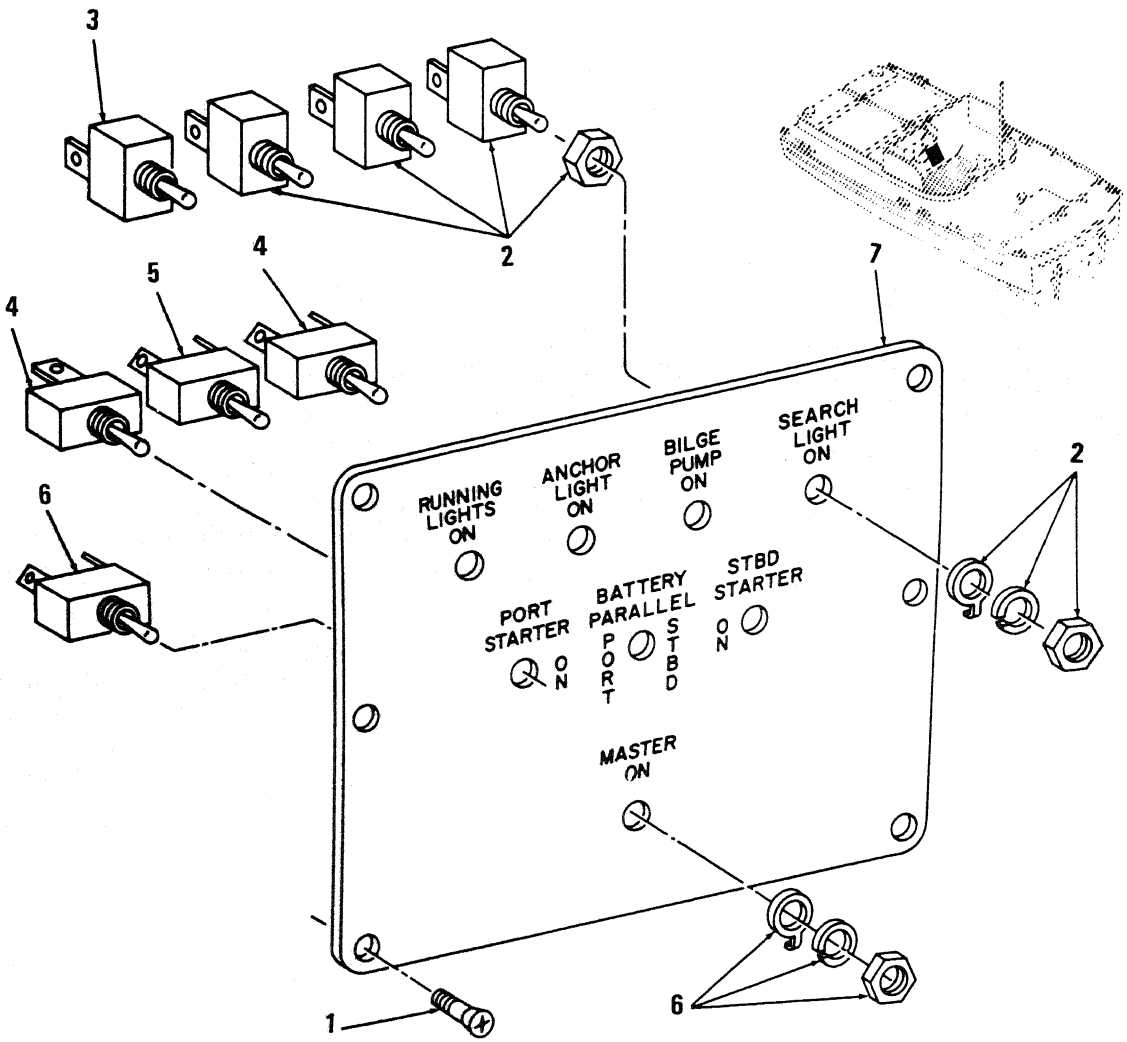

Figure 20. Switch Panel

(1) ILLUSTRATION (a) FIG NO.	(b) ITEM NO.	(2) SMR CODE	(3) NATIONAL STOCK NUMBER	(4) FSCM	(5) PART NUMBER	(6) DESCRIPTION USABLE ON CODE	(7) U/M	(8) QTY INC IN UNIT
20	1	PAOZZ	5305-00-957-7282	96906	MS35190-209	SCREW,MACHINE CONTROL PANEL,10-24 X 3/8 IN.LG.....	EA	12
20	2	PAOZZ	5930-00-655-1516	96906	MS35058-24	SWITCH,TOGGLE SINGLE POLE,RUNNING LIGHT.....	EA	2
20	3	PAOZZ	5930-00-636-2821	96906	MS35059-24	SWITCH,TOGGLE DOUBLE POLE, RUNNING LIGHT.....	EA	1
20	4	PAOZZ	5930-00-655-1520	96906	MS35058-28	SWITCH,TOGGLE SINGLE POLE,STARTER.....	EA	2
20	5	PAOZZ	5930-00-655-1518	96906	MS35058-27	SWITCH,TOGGLE SINGLE POLE,PARALLEL.....	EA	1
20	6	PAOZZ	5930-00-577-2523	96906	MS25068-24	SWITCH,MASTER.....	EA	1
20	7	XBOZZ		97403	13219E1156	PANEL CONTROL,SWITCH.....	EA	1

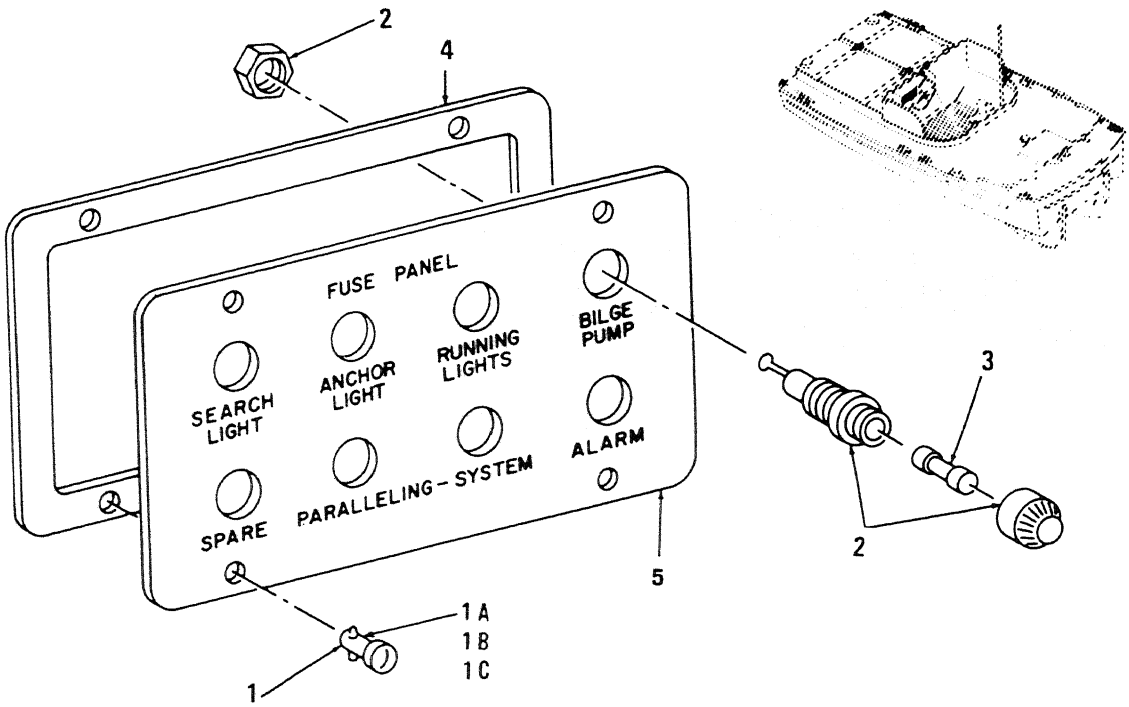

Figure 21. Fuse Panel

(1) ILLUSTRATION (a) FIG NO.	(b) ITEM NO.	(2) SMP CODE	(3) NATIONAL STOCK NUMBER	(4) FSCM	(5) PART NUMBER	(6) DESCRIPTION / USABLE ON CODE	(7) U.M.	(8) QTY INC IN UNIT
21	1	XBOZZ		81349	MILF5591STYLE2TYPE2SIZE5	STUD ASSY FUSE PANEL.....CCC,CUA	EA	4
21	1A	PAOZZ	5325-00-489-1262	94222	5-0-260	.STUD,FASTENER,SIZE 1-4 TURN; OVAL HEAD.....CUB,CUC	EA	4
21	1B	PAOZZ	5365-00-838-0422	94222	85-34-101-17	.RETAINER,FASTENER.....CUB,CUC	EA	4
21	1C	PAOZZ	5325-00-282-7471	94222	5-295	.RECEPTACLE,FASTENER.....CUB,CUC	EA	4
21	2	XBOZZ	5920-00-892-9311	81349	MILF19207TYPEFHN26G	HOLDER,FUSE.....	EA	8
21	3	PAOZZ	5920-00-284-6787	81349	F02A250V5A	FUSE,PARALLELING.....	EA	4
21	3	PAOZZ	5920-00-057-2306	81349	F02B32V20A	FUSE BILGE PUMP AND SPARE.....CCC,CUB,CUC	EA	2
21	3	PAOZZ	5920-00-581-6126	81349	F02B32V15A	FUSE,SEARCH LIGHT.....	EA	2
21	3	PAOZZ	5920-00-057-2306	81349	F02B32V20A	FUSE,BILGE PUMP.....CUA,CUB,CUC	EA	1
21	3	PAOZZ	5920-00-010-6652	81349	F02A250V3A	FUSE RUNNING LIGHT AND SEARCH LIGHT.....	EA	1
21	3	PAOZZ	5920-00-280-8342	81349	F02A250VIA	FUSE ANCHOR AND ALARM.....CCC	EA	2
21	4	XBOZZ		97403	13219E1158-2	GASKET FUSE PANEL.....	EA	1
21	5	PAOZZ		97403	13219E1158	PANEL,FUSE.....CCC,CUA	EA	1

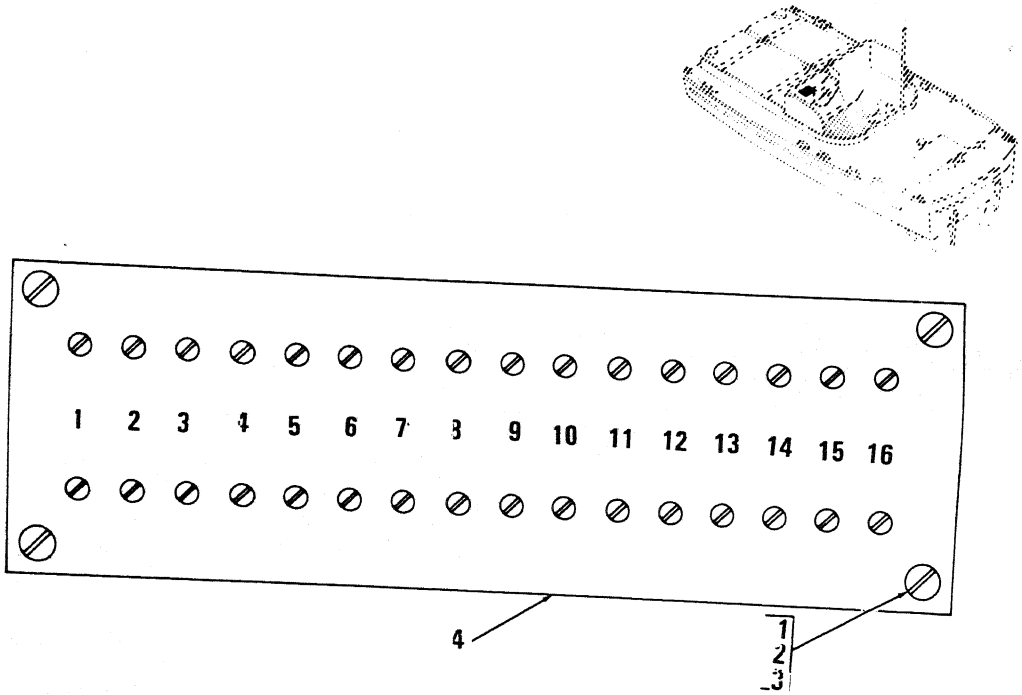

Figure 22. Terminal Board

(1) ILLUSTRATION (a) FIG NO.	(b) ITEM NO.	(2) SMR CODE	(3) NATIONAL STOCK NUMBER	(4) FSCM	(5) PART NUMBER	(6) DESCRIPTION USABLE ON CODE	(7) U/M	(8) QTY INC IN UNIT
22	1	PAOZZ	5310-00-877-5797	96906	MS21044N3	NUT,SELF-LOCKING.....	EA	4
22	2	PAOZZ	5310-00-809-8546	96906	MS27183-8	WASHER,FLAT.....	EA	4
22	3	PAOZZ	5305-00-993-1851	96906	MS35207-267	SCREW,MACHINE.....	EA	4
22	4	XBOZZ		81349	MILT55164-3TYPE	BOARD,TERMINAL.....	EA	1

FIGURE 23 NOT USED

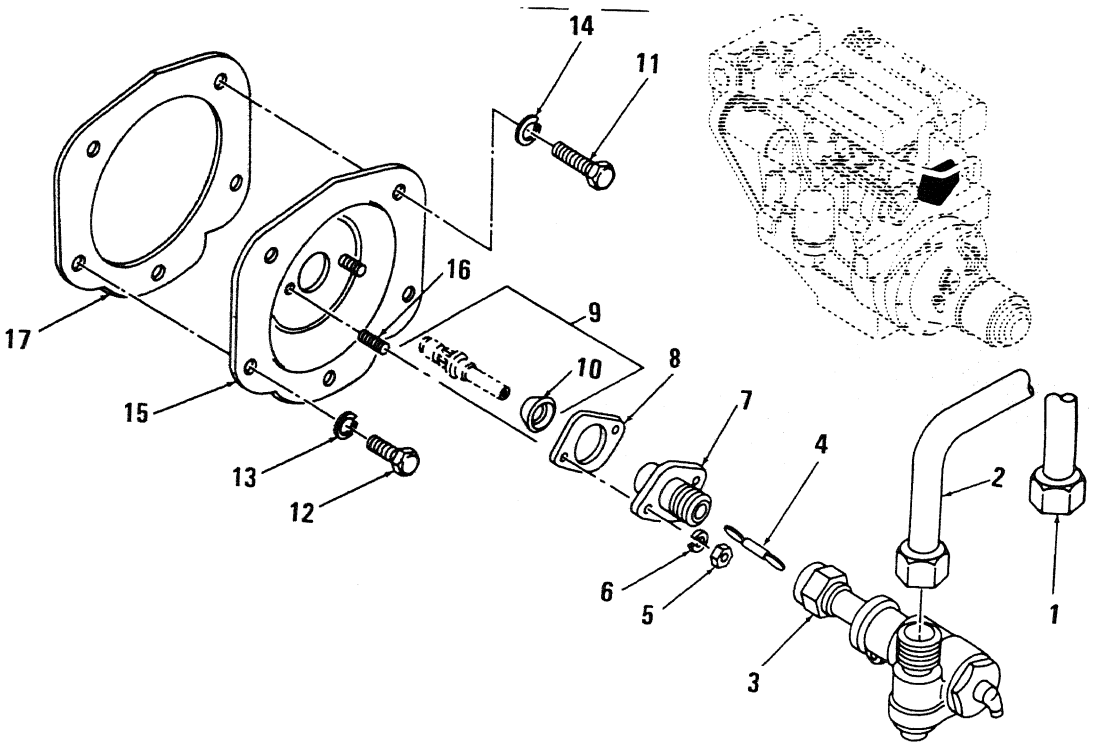

Figure 24. Tachometer Drive

(1) ILLUSTRATION (a) FIG NO	(b) ITEM NO.	(2) SMR CODE	(3) NATIONAL STOCK NUMBER	(4) FSCM	(5) PART NUMBER	(6) DESCRIPTION USABLE ON CODE	(7) U/M	(8) QTY INC IN UNIT
24	1	PAOZZ	6680-00-882-0965	96906	MS51071-7	CABLE TACHOMETER,PORT COMPONENT SAME AS CABLE PART NO.MS51071-4	EA	1
24	2	PAOZZ	6680-00-882-0966	96906	MS51071-4	CABLE TACHOMETER,STARBOARD	EA	1
24	3	PBOZZ	3010-00-695-7827	72582	1565192	.ADAPTOR TACHOMETER DRIVE	EA	2
24	4	XBOZZ	5315-00-597-5387	70040	1565109	..KEY,DRIVE TACHOMETER DRIVE	EA	2
24	5	XBOZZ		24617	121917	..NUT,HEXAGON ADAPTOR TO COVER ASSEMBLY,5/16-24 IN	EA	4
24	6	PAOZZ	5310-00-407-9566	96906	MS35338-45	..WASHER,LOCK ADAPTOR TO COVER ASSEMBLY,5/16 IN	EA	4
24	7	XBOZZ	6680-00-364-3506	72582	5155819	..ADAPTOR,TACHOMETER TACHOMETER DRIVE	EA	2
24	8	KBOZZ		72582	5135935	..GASKET,ADAPTOR TACHOMETER DRIVE	EA	2
24	9	XBOZZ	2815-00-072-9388	72582	5124330	..SHAFT ASSEMBLY ASSEMBLY	EA	2
24	10	PBOZZ		72582	5155818	...SLINGER TACHOMETER DRIVE	EA	2
24	11	PAOZZ	5305-00-069-5572	72582	179857	BOLT,MACHINE COVER AND STUD ASSEMBLY	EA	4
24	12	PAOZZ	5305-00-071-1767	96906	MS90725-110	BOLT,MACHINE COVER AND STUD ASSEMBLY	EA	6
24	13	PAOZZ	5310-00-584-5272	96906	MS35338-48	WASHER,LOCK COVER AND STUD ASSEMBLY	EA	6
24	14	PAOZZ	5310-00-595-6852	72582	5150568	WASHER,FLAT COVER AND STUD ASSEMBLY	EA	4
24	15	XBOZZ		24617	5123118	COVER AND STUD ASSEMBLY,TACHOMETER DRIVE	EA	2
24	16	PAOZZ	5307-00-697-1264	72582	5155854	.STUD	EA	4
24	17	PAOZZ	5330-00-620-7359	72582	5117061	GASKET,COVER	EA	2

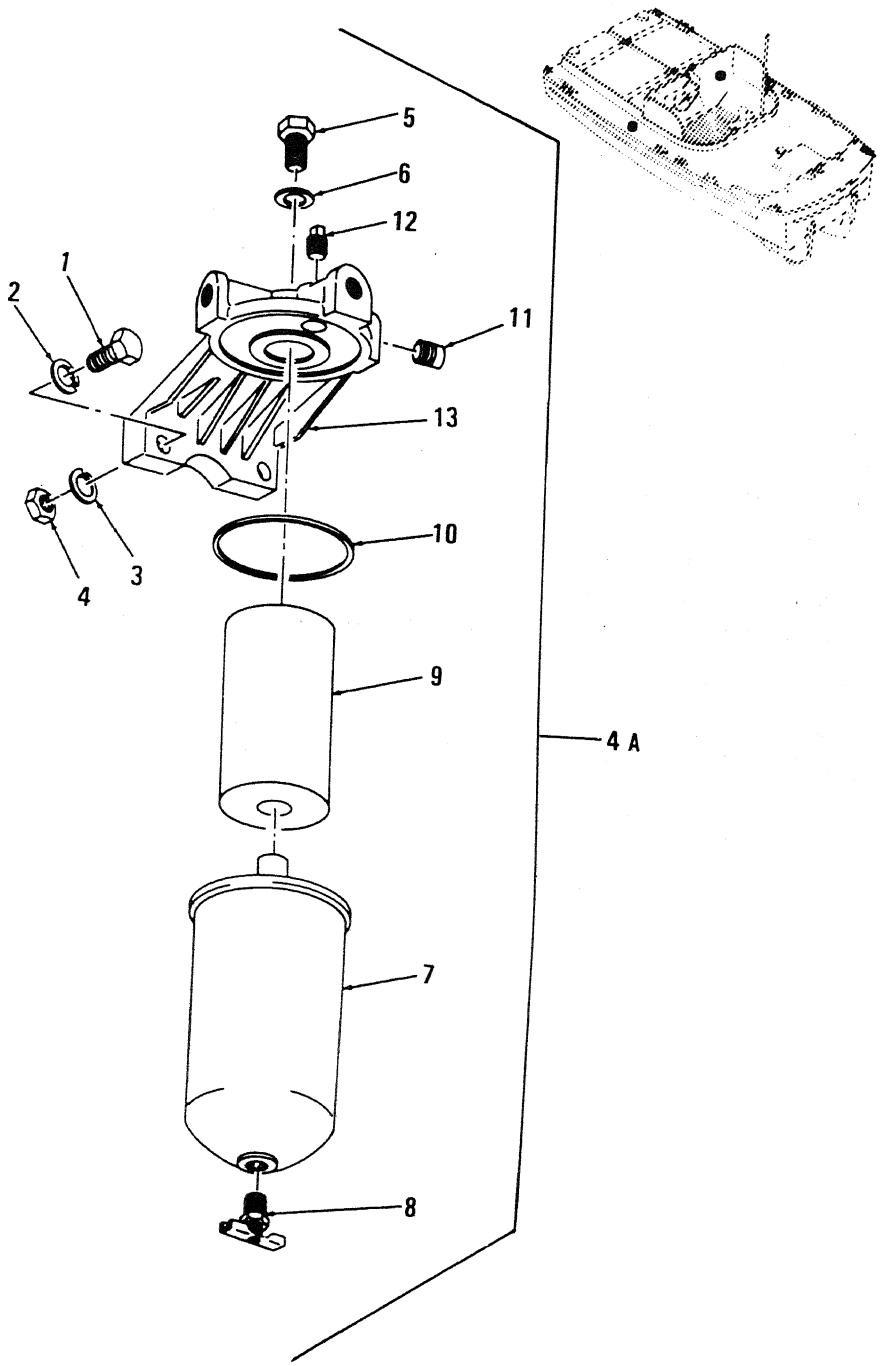

Figure 25. Fuel Strainer

(1) ILLUSTRATION (a) FIG NO	(b) ITEM NO	(2) SMR CODE	(3) NATIONAL STOCK NUMBER	(4) FSCM	(5) PART NUMBER	(6) DESCRIPTION USABLE ON CODE	(7) U/M	(8) QTY INC IN UNIT
25	1	PAOZZ	5305-00-269-3211	96906	MS90725-60	.BOLT,MACHINE	EA	4
25	2	PAOZZ	5310-00-637-9541	96906	MS35338-46	.WASHER,LOCK	EA	4
25	3	PAOZZ	5310-00-080-6004	96906	MS27183-14	.WASHER,FLAT	EA	4
25	4	PAOZZ	5310-00-880-7744	96906	MS51967-5	.NUT,HEXAGON	EA	4
25	4A	PAOZZ	2910-00-287-5474	72582	5575568	.STRAINER FUEL OIL	EA	2
25	5	PAOZZ	2910-00-080-7294	72582	6435793	..BOLT,MACHINE	EA	2
25	6	XAOZZ		72582	6435794	..GASKET	EA	2
25	7	XAOZZ		72582	5577586	..SHELL FUEL OIL	EA	2
25	8	PAOZZ	4820-00-477-9779	72582	103647	..COCK,DRAIN	EA	2
25	9	PAOZZ	2910-00-792-8985	72582	5574961	..ELEMENT FUEL OIL STRAINER	EA	2
25	10	XAOZZ		72582	5574161	.. GASKET (FURNISHED W/ELEMENT)	EA	2
25	11	PAOZZ	5365-00-708-7865	72582	5145011	..PIPE,PLUG	EA	2
25	12	PAOZZ	4730-00-187-4207	72582	5145010	..PLUG,PIPE	EA	4
25	13	XDOZZ		72582	6436253	..COVER	EA	2

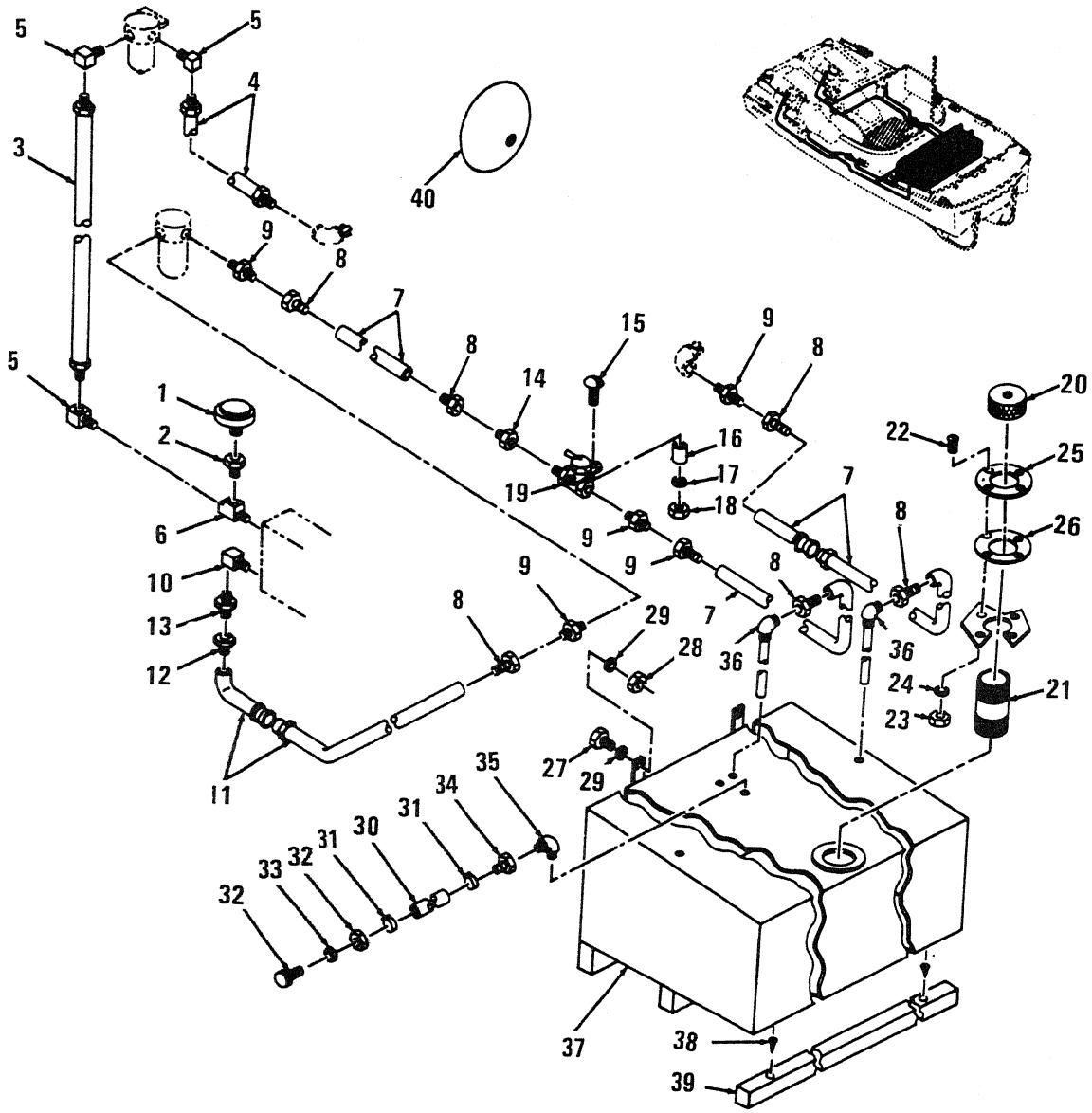

Figure 26. Fuel Tank, Lines, Fittings, Alarm Bell, and Fuel Pressure and Sensor

(1) ILLUSTRATION (a) FIG NO.	(b) ITEM NO	(2) SMR CODE	(3) NATIONAL STOCK NUMBER	(4) FSCM	(5) PART NUMBER	(6) DESCRIPTION USABLE ON CODE	(7) U/M	(8) QTY INC IN UNIT
26	1	PAOZZ	5930-00-855-3938	74400	M4012	SWITCH,FUEL PRESSURE	EA	2
26	2	PAOZZ	4730-00-011-9922	88044	AN912-1	REDUCER,BRASS 1-4X1-8IN PIPE	EA	2
26	3	PAOZZ	2815-00-922-2009	72582	5137492	HOSE ASSY FILTER TO CYLINDER HEAD	EA	2
26	4	PAOZZ	4720-00-432-1267	72582	5131829	HOSE ASSEMBLY,NONME	EA	2
26	5	PAOZZ	4730-00-277-8274	72582	137423	ELBOW 90 DEGREE	EA	4
26	6	PAOZZ	4730-00-277-9615	24617	444552	TEE,PIPE	EA	2
26	7	XBOZZ		87373	831-6	HOSE STRAINER TO VALVE	FT	V
26	8	PAOZZ		45681	30882-6-6B	FITTING,SWIVEL PUSH-LOK	EA	16
26	9	XBOZZ		81343	SAEJ513BFIG251-4 X5-8	ADAPTER,FUEL CCC	EA	6
26	10	PAOZZ	4730-00-934-8026	45681	30182-6-6B	.FITTING,BRASS 3-8IN HOSE TO 3-8IN PIPE CUA,CUB,CUC	EA	4
26	11	XBOZZ		87373	831-6	HOSE STRAINER TO VALVE	FT	V
26	12	PAOZZ		45681	30882-6-6B	FITTING,SWIVEL	EA	16
26	13	XBOZZ		81343	SAEJ513BFIG251-4 X5-8	ADAPTER,FUEL CCC	EA	6
26	14	XBOZZ		81343	SAEJ513BFIG273-8 X5-8	ADAPTER,VALVE CCC	EA	4
26	15	PAOZZ	5305-00-988-1728	96906	MS35206-287	SCREW,MACHINE	EA	4
26	16	XBOZZ		97403	13219E1111-204	SPACER	EA	4
26	17	PAOZZ	5310-00-582-5965	96906	MS35338-44	WASHER,LOCK	EA	4
26	18	PAOZZ	5310-00-997-1888	96906	MS35649-2252	NUT,HEXAGON	EA	4
26	19	PAOZZ	4820-00-741-0385	30327	103HD3-8	VALVE,SHUT-OFF	EA	2
26	20	PAOZZ	2910-00-410-7514	97403	13216E6797	CAP,FUEL TANK CCC	EA	2
26	20	PAOZZ	2910-01-139-1115	97403	13226E1361	CAP FUEL TANK CUA	EA	1
26	20	PAOZZ	2910-00-214-2279	81336	8630-24-3-9	CAP FUEL TANK CUB,CUC	EA	1
26	21	PAOZZ	4730-00-001-6174	97403	13216E6800	NIPPLE,PIPE CCC	EA	2
26	22	PAOZZ	5305-00-984-7341	96906	MS35191-273	SCREW,MACHINE CCC	EA	8
26	23	XDOZZ	5310-00-934-9765	96906	MS35650-304	NUT,PLAIN,HEXAGON	EA	4
26	24	PAOZZ	5310-00-809-8546	96906	MS27183-8	WASHER,FLAT CCC	EA	8
26	25	XBOZZ		97403	13216E6798	SHIELD FUEL TANK CCC	EA	2
26	26	XBOZZ		97403	13216E6799	GASKET,SHIELD CCC	EA	2
26	27	XBOZZ	5305-00-782-9495	96906	MS90725-111	SCREW TANK MOUNTING	EA	4
26	28	XBOZZ		96906	MS24129-2-8C	NUT SELF-LOCKING,HEXAGON	EA	4
26	29	XBOZZ	5310-00-167-0823	88044	AN960-816	WASHER,FLAT	EA	8
26	30	XBOZZ		81348	SAE30R1 1-21N ID	HOSE FUEL AND OIL CCC,CUA	EA	2
26	31	PAOZZ	4730-00-908-3195	96906	MS35842-10	CLAMP HOSE CCC,CUA	EA	2
26	32	XBOZZ		79577	8705	VENT,FUEL TANK CCC,CUA	EA	2
26	33	XDOZZ		97403	13213E5389-1	GASKET,VENT TANK CCC,CUA	EA	4
26	34	XBOZZ		97403	13213E5469-2	ADAPTER,PIPE VENT TANK CCC,CUA	EA	2
26	35	XBOZZ		96906	MS51952-3	ELBOW,PIPE STREET 90 DEGREE CCC,CUA	EA	4

(1) ILLUSTRATION (a) FIG NO.	(b) ITEM NO.	(2) SMR CODE	(3) NATIONAL STOCK NUMBER	(4) FSCM	(5) PART NUMBER	(6) DESCRIPTION USABLE ON CODE	(7) UM
26	36	XBOZZ		97403	13219E1142	TUBE,SUCTION.....CCC	EA
26	37	XBOZZ		97403	13219E1160	TANK,FUEL.....	EA
26	38	XBOZZ		96906	MS35494-615	SCREW WOOD,FLAT HEAD.....	EA
26	39	XBOZZ		81348	MML751GRN01	LUMBER,SOFTWOOD.....	EA
26	40	PAOZZ	6350-00-141-4847	19557	435-4G1	BELL,ELECTRICAL ALARM SYSTEM (24V).....	EA

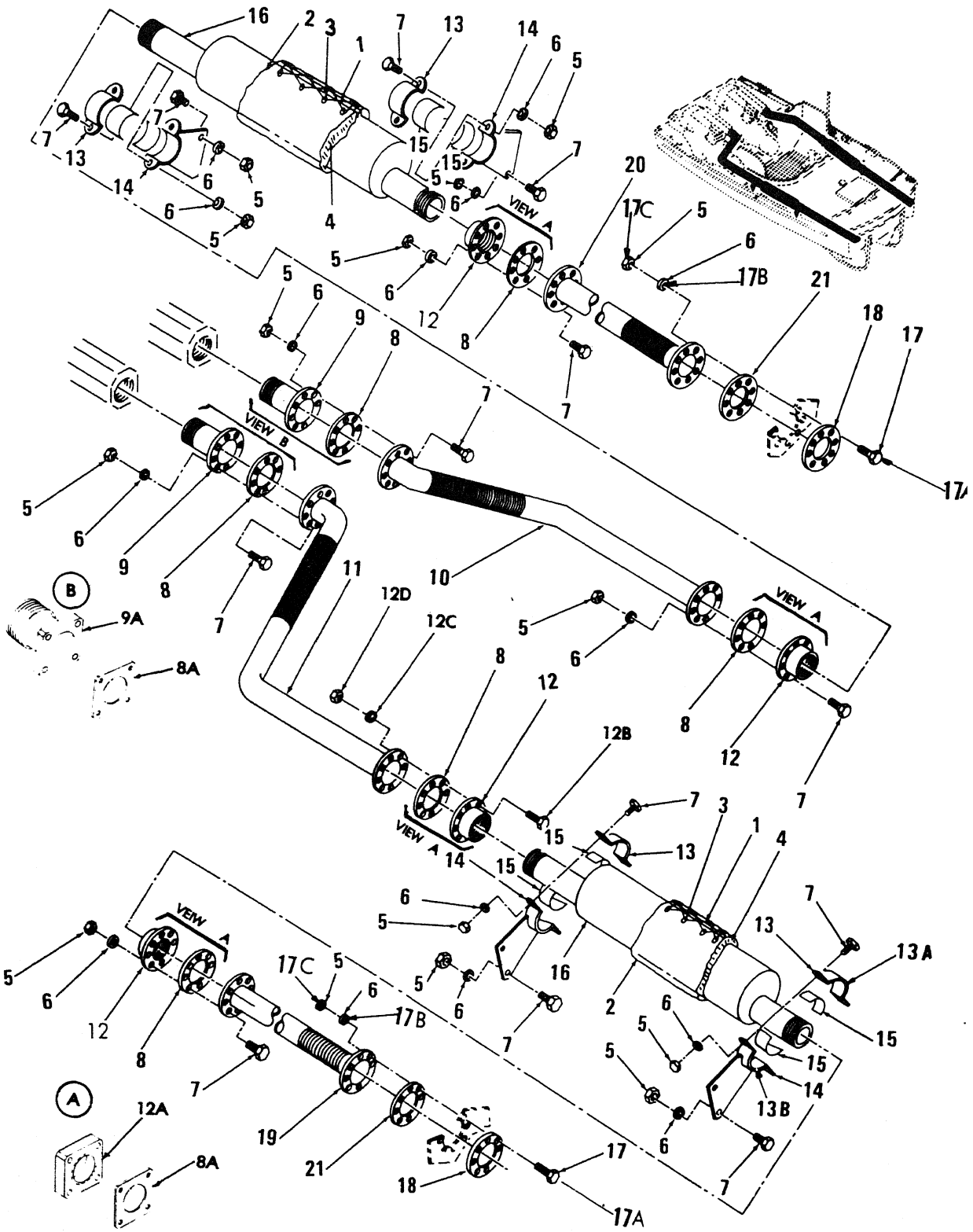

Figure 27. Exhaust Pipes, Mufflers and Fittings

(1) ILLUSTRATION (a) FIG NO.	(b) ITEM NO.	(2) SMR CODE	(3) NATIONAL STOCK NUMBER	(4) FSCM	(5) PART NUMBER	(6) DESCRIPTION USABLE ON CODE	(7) U/M	(8) QTY INC IN UNIT
						GROUP 07 ENGINE EXHAUST SYSTEM		
27	1	PAOZZ	4010-01-039-3856	39428	3458T14	WIRE,STRAND,CRES 50 FT REQUIRED	FT	50
27	2	PAOZZ	5640-01-030-1631	90896	41M10AAA	CLOTH,ASBESTOS 96 SQ FT REQUIRED....CUA,CUB,CUC	FT	96
27	3	PAOZZ	5325-00-212-7857	97403	13219E1175	FASTENER,INSULATION EXH COVERS	SE	100
27	4	PAOZZ	5640-0 -786-2229	81349	MIL116411	INSULATION EXH COVERS....CCC	SH	10
27	5	PAOZZ	5310-00-767-0445	96906	MS51971-2	NUT,HEXAGON....CCC	EA	80
27	6	PAOZZ	5310-00-974-6623	96906	MS35338-140	WASHER,LOCK....CCC	EA	80
27	7	PAOZZ	5306-00-543-4405	96906	MS35307-334	BOLT,MACHINE....CCC	EA	64
27	8	PAOZZ	5330-00-001-4982	97403	13219E1124-1	GASKET,EXHAUST....CCC	EA	6
27	8A	PAOZZ	5330-01-027-8986	97403	13219E3470	GASKET EXHAUST....CUA,CUB,CUC	EA	6
27	9	XBOZZ	4730-01-097-4906	97403	13219E1182	FLANGE,MANIFOLD	EA	2
27	9A	XBOZZ		97403	13219E3473	ADAPTER,OUTLET....CUA,CUB,CUC	EA	1
27	10	PAOZZ	2990-00-234-0460	97403	13219E1185	HEADER EXHAUST PORT....CCC	EA	1
27	10	PAOZZ	2990-01-030-8827	97403	13219E3463-1	EXHAUST HEADER,PORT....CUA,CUB,CUC	EA	1
27	11	PAOZZ	2990-01-030-9239	97403	13219E3463-2	EXHAUST HEADER,STBD....CUA,CUB,CUC	EA	1
27	11	XBOZZ		94703	13219E1184	HEADER EXHAUST STBD....CCC	EA	1
27	12	PAOZZ	2990-00-2 . 0470	97403	13219E1183	FLANGE....CCC	EA	4
27	12A	XBOZZ		97403	13219E3471	FLANGE,EXHAUST....CUA,CUB,CUC	EA	8
27	12B	PAOZZ	5305-00-964-0635	96906	MS35307-369	SCREW,CAP....CUA,CUB,CUC	EA	8
27	12C	PAOZZ	5310-00-984-7042	96906	MS35338-141	WASHER,LOCK....CUA,CUB,CUC	EA	24
27	12D	PAOZZ	5310-00-913-8881	96906	MS51971-3	NUT,HEX....CUA,CUB,CUC	EA	24
27	13	XBOZZ		97403	13219E1127	CLAMP,EXHAUST....CCC	EA	4
27	13A	XBOZZ		97403	13219E3465	CLAMP,EXHAUST....CUA,CUB,CUC	EA	6
27	13B	XBOZZ		97403	13219E3466	CLAMP,EXHAUST....CUA,CUB,CUC	EA	6
27	14	XBOZZ		97403	13219E3464	SUPPORT,EXHAUST....CUA,CUB,CUC	EA	4
27		PAOZZ	5310-00-984-3806	96906	MS51922-9	NUT,SELF-LOCKING,HE....CUA,CUB,CUC	EA	24
27	15	XBOZZ		81346	ASTMD315AAA GRADE 1-8X1 IN	TAPE, ASBESTOS CLAMP....CCC	EA	4
27	16	XDOZZ	2990-00-432-1326	91435	7530GS3	MUFFLER,EXHAUST....CCC	EA	2
27	16	PAOZZ	2990-00-905-8122	18265	MFM06-0005	MUFFLER,EXHAUST....CUA,CUB,CUC	EA	2
27	17	PAOZZ	5306-00-637-9674	96906	MS35307-336	BOLT,MACHINE....CCC	EA	16
27	17A	PAOZZ	5305-00-051-0839	96906	MS51957-98	SCREW,MACH....CUA,CUB,CUC	EA	16
27	17B	PAOZZ	5310-00-625-5756	96906	MS15795-812	WASHER,FLAT....CUA,CUB,CUC	EA	16
27	17C	PAOZZ	5310-00-241-6606	96906	MS17830-5C	NUT,SELF LKG....CUA,CUB,CUC	EA	16
27	18	XBOZZ		97403	13219E1168-2	RING,EXHAUST....CCC	EA	2
27	19	PAOZZ	2990-00-234-0461	97403	13219E1167-2	TAILPIPE ASSY STBD....CCC	EA	1
27	20	PAOZZ	2990-00-221-5857	97403	13219E1167-1	TAILPIPE ASSY PORT....CCC	EA	1
27	20	PAOZZ	2990-01-031-1903	97403	13219E3462	TAILPIPE,EXHAUST....CUA,CUB,CUC	EA	2
27	21	PAOZZ	5330-00-222-0569	97403	13219E1124-2	GASKET,EXHAUST....CCC	EA	2

(1) ILLUSTRATION (a) FIG NO	(b) ITEM NO	(2) SMR CODE	(3) NATIONAL STOCK NUMBER	(4) FSCM	(5) PART NUMBER	(6) DESCRIPTION USABLE ON CODE	(7) U/M	(8) QTY INC IN UNIT
27	21	PAOZZ	5330-01-026-6331	97403	13219E3468-64	GASKET EXHAUST.....CUA,CUB,CUC	EA	2

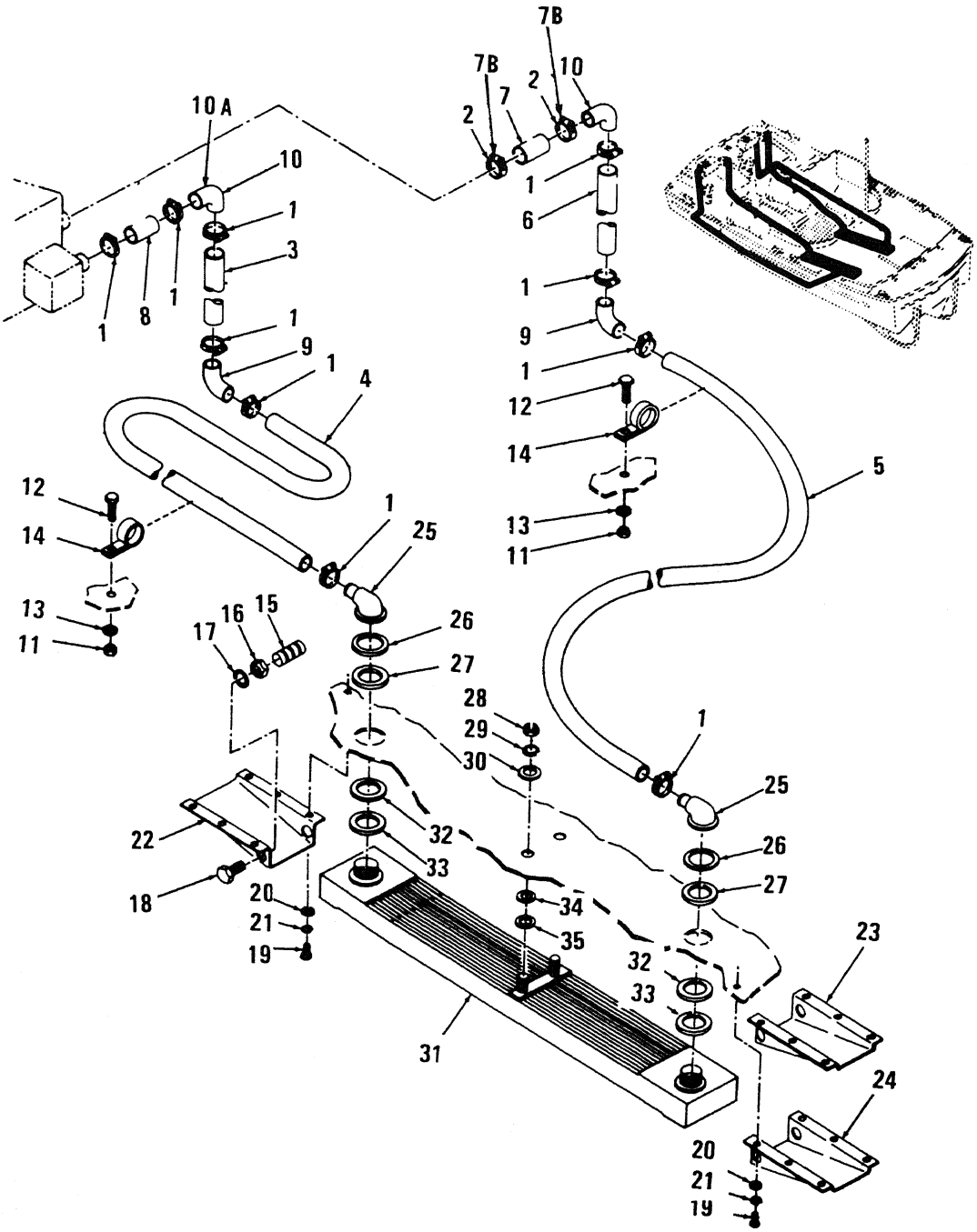

Figure 28. Heat Exchanger, Cooling Lines and Fittings

(1) ITRATION (b) ITEM NO.	(2) SMR CODE	(3) NATIONAL STOCK NUMBER	(4) FSCM	(5) PART NUMBER	(6) DESCRIPTION USABLE ON CODE	(7) U/M	(8) QTY INC IN UNIT
					GROUP 08 ENGINE COOLING SYSTEM		
1	XBOZZ	4730-00-585-8394	81343	SAEJ536ATYPEFSIZ E28	CLAMP HOSE COOLING SYSTEM.....CCC	EA	10
1	PAOZZ	4730-00-908-3193	96906	MS35842-12	CLAMP,HOSE.....CUA,CUB,CUC	EA	2
2	XBOZZ	4730-00-204-3491	81343	SAEJ536ATYPEFSIZ E32	CLAMP,HOSE,COUPLING.....CCC	EA	2
3	MOOZZ		81343	SAEJ20R1	HOSE COOLING SYSTEM MANUFACTURE FROM.....	EA	1
3A	PAOZZ	4720-00-278-4917	73842	1-1/2 REDWING MULT-PURP	.HOSE,HVY DTY 1-1/2 ID,24 IN.LENGTH.....	FT	V
4	MOOZZ		81343	SAEJ20R1	HOSE COOLING SYSTEM MANUFACTURE FROM.....	EA	1
4A	PAOZZ	4720-00-278-4917	73842	1-1/2 REDWING MULT-PURP	.HOSE,HVY DTY 1-1/2 ID,80 IN.LENGTH.....CCC	FT	V
4A	PAOZZ	4720-00-278-4917	73842	1-1/2 REDWING MULT-PURP	.HOSE,HVY DTY 50FT REQUIRED.....CUA,CUB,CUC	FT	50
5	MOOZZ		81343	SAEJ20R1	HOSE COOLING SYSTEM MANUFACTURE FROM.....	EA	1
5A	PAOZZ	4720-00-278-4917	73842	1-1/2 REDWING MULT-PURP	.HOSE,HVY DTY 1-1/2 ID,120 IN.LENGTH.....	FT	V
6	MOOZZ		81343	SAEJ20R1	HOSE COOLING SYSTEM MANUFACTURE FROM.....	EA	1
6A	PAOZZ	4720-00-278-4917	73842	1-1/2 REDWING MULT-PURP	.HOSE,HVY DTY 1-1/2,ID 30 IN.LENGTH.....	FT	V
7	MOOZZ		81343	SAEJ20R1	HOSE COOLING SYSTEM MANUFACTURE FROM.....	EA	1
7A	PAOZZ	4720-00-517-7917	16662	0071-M-14360	.HOSE,HVY DTY 1-3/4 ID,4 IN.LENGTH.....CCC	FT	2
7A	PAOZZ	4720-00-018-2162	81348	ZZ-H-428	..HOSE,NONMETALLIC 12 IN REQUIRED.....CUA,CUB,CUC	FT	1
7B	PAOZZ	4730-00-909-8627	96906	MS35842-13	..CLAMP,HOSE.....CUA,CUB,CUC	EA	8
8	MOOZZ		81343	SAEJ20R1	HOSE COOLING SYSTEM MANUFACTURE FROM.....	EA	1
8A	PAOZZ	4720-00-517-7917	16662	0071-M-14360	.HOSE,HVY DTY 1 3/4 ID,4 IN.LENGTH.....	FT	V
9	PAOZZ	4730-00-818-5194	41947	W2055	ELBOW 1 1/4 X 1 1/4.....	EA	2
10	PAOZZ	4730-00-818-3866	41947	W2064	ELBOW 1 1/2 X 1 1/4.....CCC	EA	2
10A	XBOZZ	4730-00-818-3866	12168	607LT1 1-2X1 1-4	ELBOW NINETY DEGREE COPPER.....CUA,CUB,CUC	EA	1
11	PAOZZ	5310-00-031-0920	96906	MS17828-4C	NUT,SELF LOCK HOSE CLAMP.....CCC	EA	6
12	PAOZZ	5305-00-225-3839	96906	MS90725-8	SCREW,CAP,HEXAGON H HOSE CLAMP.....CCC	EA	6
13	PAOZZ	5310-00-809-4058	96906	MS27183-10	WASHER,FLAT HOSE CLAMP.....CCC	EA	6
14	XBOZZ		97403	132135357	CLAMP,HOSE.....CCC	EA	6
15	PAOZZ	5340-00-682-2174	81349	MILA18001	ANODE,CORROSION PRE.....	EA	16
16	PAOZZ	5310-00-016-7361	96906	MS21083N18	NUT,SELF LOCKING ANODE MOUNTING.....	EA	4
17	PAOZZ	5310-00-209-0698	96906	MS27183-29	WASHER,FLAT ANODE MOUNTING.....	EA	4

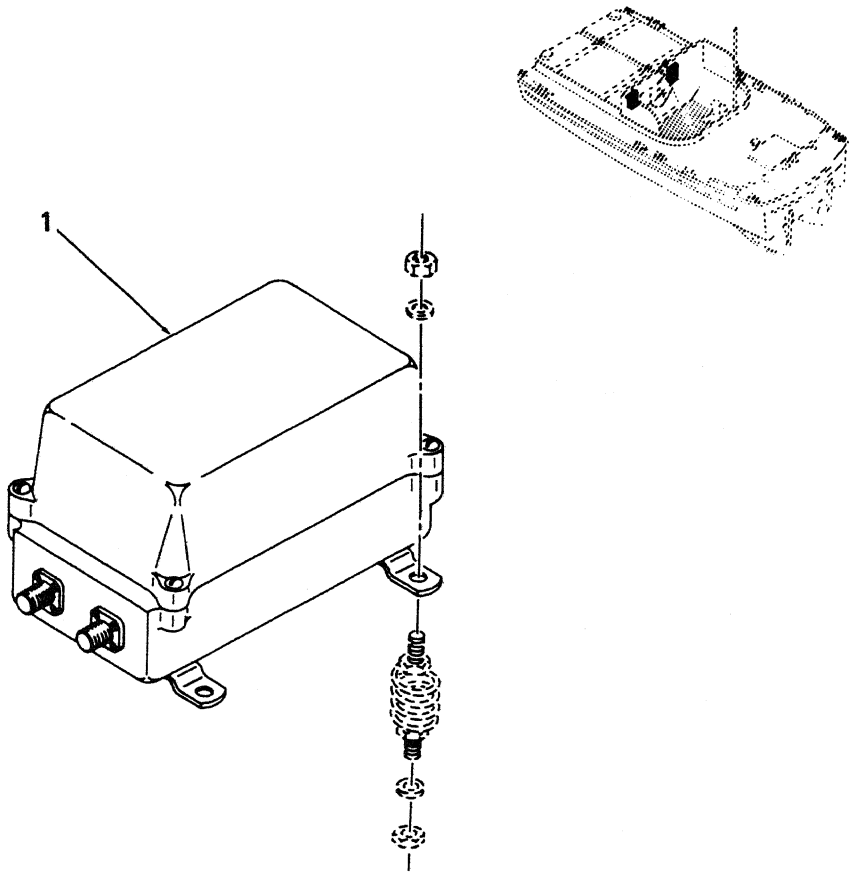

Figure 29. Generator Regulator

(1) ISTRATION		(2)	(3)	(4)	(5)	(6)	(7)	(8)
) G).	(b) ITEM NO.	SMR CODE	NATIONAL STOCK NUMBER	FSCM	PART NUMBER	DESCRIPTION USABLE ON CODE	U/M	QTY INC IN UNIT
						GROUP 09 ENGINE STARTING SYSTEM		
:9	1	PAOZZ	2920-00-640-7518	16764	1118644	REGULATOR ASSY GENERATOR.....CCC	EA	2
:9	1	PAOZZ		72582	5102888	REGULATOR,ENG GEN VOLTAGE 24V 18AMP NEG GRD.....CUA,CUB,CUC	EA	2

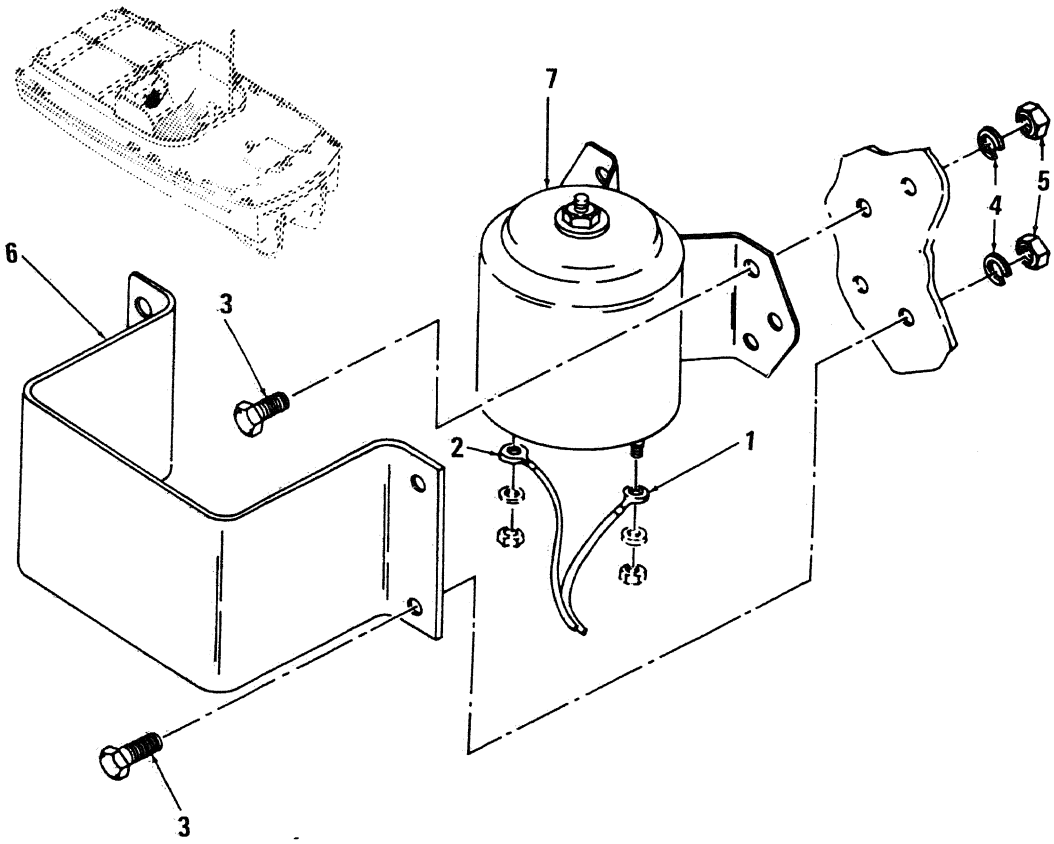

Figure 30. Magnetic Cranking Switch

SECTION II

(1) LUSTRATION (a) FIG NO	(b) ITEM NO	(2) SMR CODE	(3) NATIONAL STOCK NUMBER	(4) FSCM	(5) PART NUMBER	(6) DESCRIPTION USABLE ON CODE	(7) U/M	(8) QTY INC IN UNIT
30	1	PAOZZ	2920-00-241-7625	97403	13219E1144-1	CABLE MAGNETIC SWITCH TO STARBOARD STARTER.....	EA	1
30	2	PAOZZ	2920-00-241-7631	97403	13219E1144-2	CABLE MAGNETIC SWITCH TO PORT STARTER.....	EA	1
30	3	PAOZZ	5305-00-068-0502	96906	MS90725-6	.BOLT.....	EA	8
30	4	PAOZZ	5310-00-809-4058	96906	MS27183-10	.WASHER,FLAT.....	EA	8
30	5	PAOZZ	5310-00-031-0920	96906	MS17828-4C	.NUT,SLEF-LOCKING.....	EA	8
30	6	XBOZZ		97403	1321E5297	.GUARD,COVER.....	EA	1
30	7	PAOZZ	5945-00-863-3418	35510	4924SC	.RELAY,ELECTROMAGNET MAGNETIC.....	EA	1

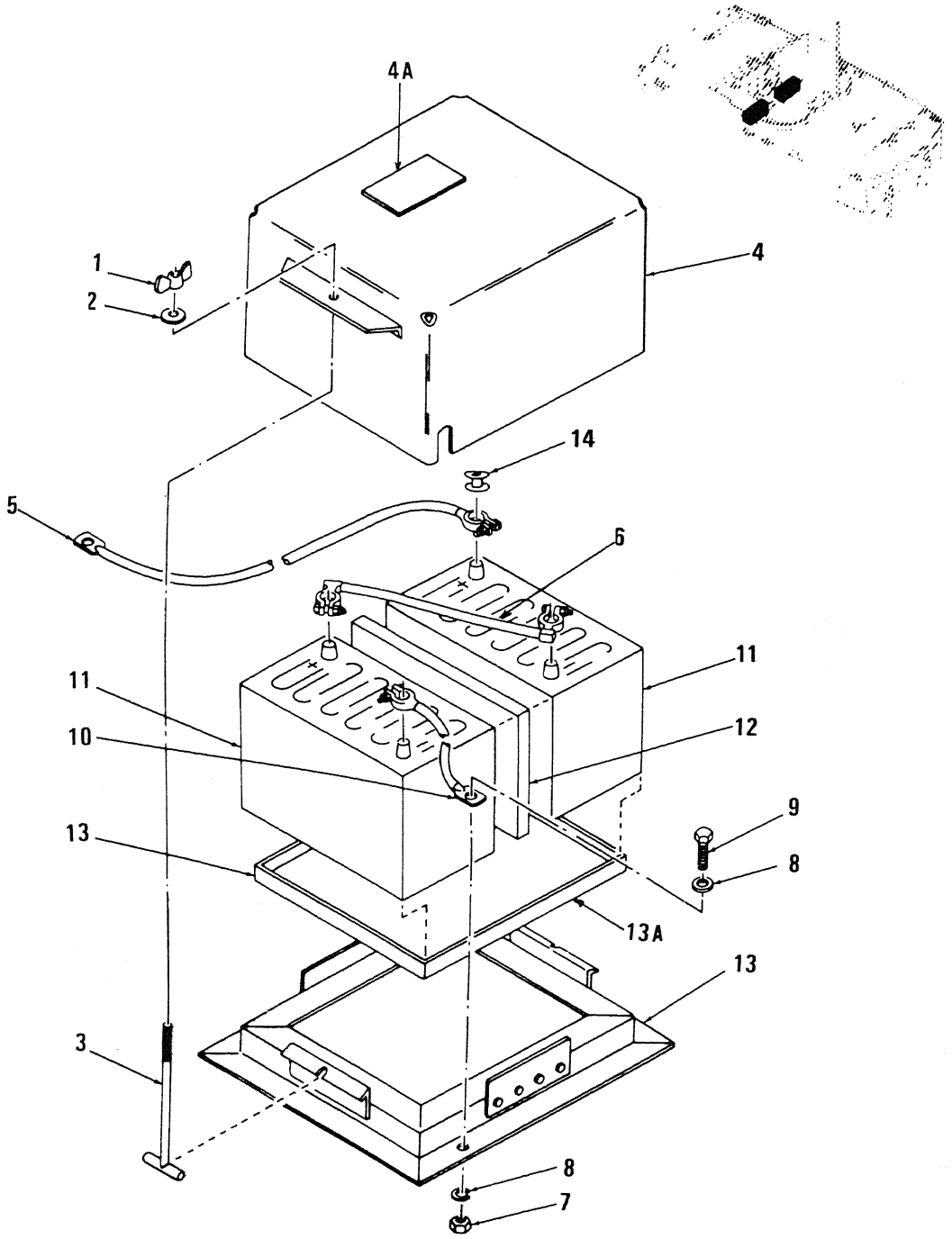

Figure 31. Batteries, Cover and Cables

SECTION II

(1) ILLUSTRATION (a) FIG NO	(b) ITEM NO.	(2) SMR CODE	(3) NATIONAL STOCK NUMBER	(4) FSCM	(5) PART NUMBER	(6) DESCRIPTION USABLE ON CODE	(7) U/M	(8) QTY INC IN UNIT
31	1	PAOZZ	5310-00-889-2606	96906	MS35425-42	NUT,PLAIN WING,BATTERY COVER,3/8-16 IN.THD SIZE.....	EA	4
31	2	PAOZZ	5310-00-225-5328	96906	MS15795-841	WASHER,FLAT.....	EA	4
31	3	PAOZZ	5306-00-406-1254	97403	13213E5399	BOLT (T),BATTERY COVER.....	EA	4
31	4	XDOZZ	6135-01-081-9725	97403	13219E1147	COVER,BATTERY.....	EA	1
31	4A	XBOZZ		97403	13219E1148	PLATE,BATTERY.....CUA,CUB,CUC	EA	2
31	5	PAOZZ	6140-00-008-9794	97403	13219E1146-1	LEAD,STORAGE BATTER BATTERY TO MAGNETIC SWITCH,PORT.....	EA	1
31	5	PAOZZ	6140-00-008-9795	97403	13219E1146-2	CABLE BATTERY MAGNE BATTERY TO MAGNETIC SWITCH,STBD.....CCC	EA	1
31	5	PAOZZ	6140-01-027-9035	97403	13219E3497-2	LEAD,STORAGE BATTER.....CUA,CUB,CUC	EA	1
31	6	PAOZZ	6140-00-008-9793	97403	13219E1139	CABLE BATTERY JUMPE BATTERY JUMPER.....	EA	2
31	7	XBOZZ	5310-00-701-5786	97403	MS17828-6C	NUT,HEXAGON TRAY TO FRAME,3/8-16 IN.THD SIZE.....	EA	8
31	8	PAOZZ	5310-00-080-6004	96906	MS27183-14	WASHER FLAT,TRAY TO FRAME,0.406 ID X 0.812 ODX 0.065 IN.THK...	EA	8
31	9	PAOZZ	5305-00-269-3211	96906	MS90725-60	SCREW CAP,HEXAGON,TRAY TO FRAME,3/8-16 X 1 IN.LG.....	EA	8
31	10	PAOZZ	6140-00-008-9792	97403	13219E1138	LEAD,STORAGE BATTER BATTERY TO GROUND.....	EA	2
31	11	PAOZA	6140-00-057-2554	96906	MS35000-3	BATTERY,12 VOLT,100.....	EA	4
31	12	XBOZZ		97403	13219E1140	LINER BATTERY TRAY.....	EA	2
31	13	XBOZZ		97403	13219E1141	TRAY,BATTERY.....CCC	EA	2
31	13A	XOBZZ		97403	13219E3487	TRAY,BATTERY.....CUA,CUB,CUC	EA	2
31	14	PAOZZ	5325-00-290-1960	96906	MS35489-27	GROMMET,NONMETALLIC.....CCC	EA	2

FIGURE 32 NOT APPLICABLE

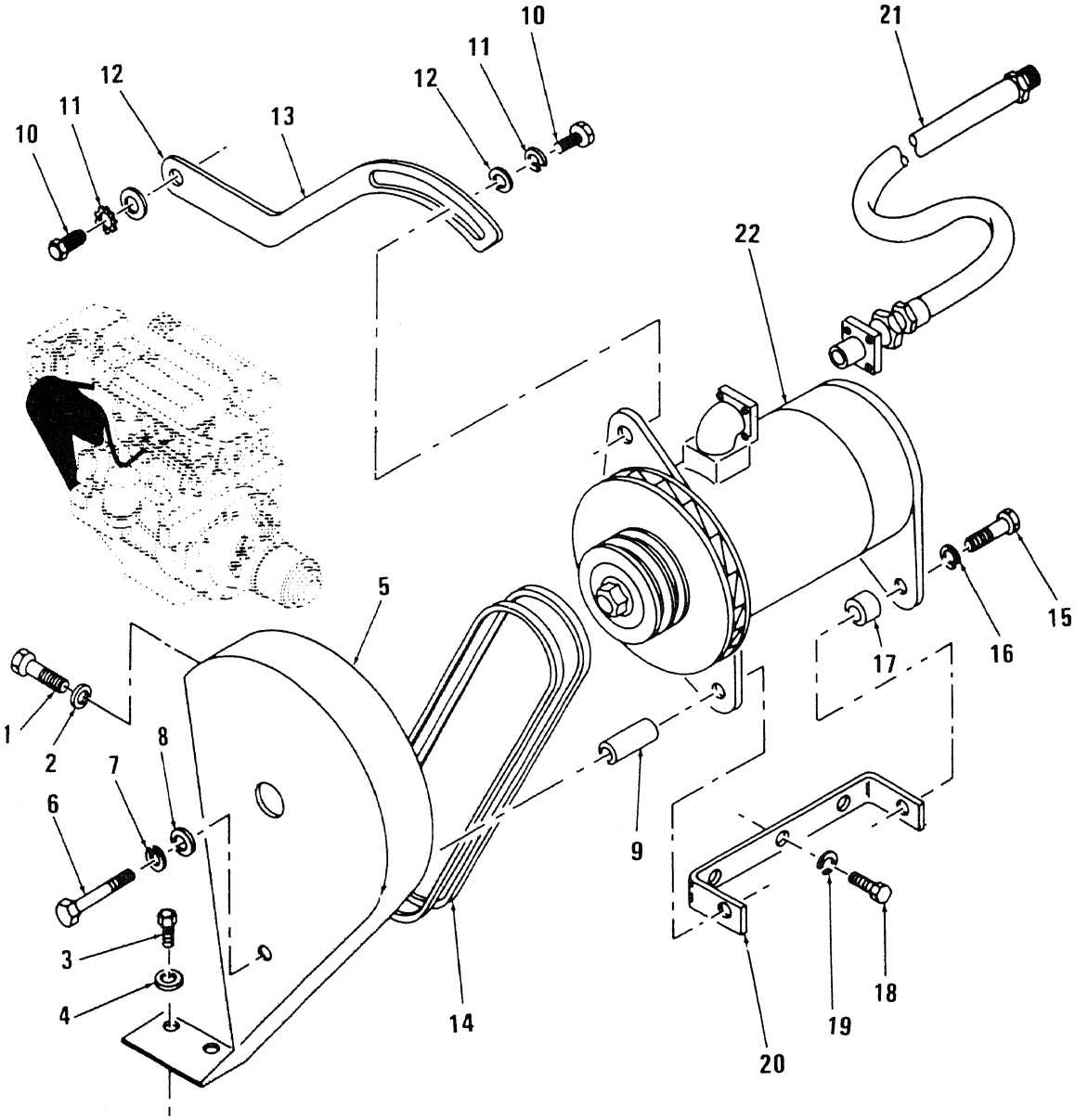

Figure 33. V-Belt Shield, V-Belt and Generator Mounting Parts.

(1) ILLUSTRATION (a) FIG NO	(b) ITEM NO	(2) SMR CODE	(3) NATIONAL STOCK NUMBER	(4) FSCM	(5) PART NUMBER	(6) DESCRIPTION USABLE ON CODE	(7) U/M	(8) QTY INC IN UNIT
						GROUP 10 ENGINE		
33	1	PAOZZ	5305-00-069-5570	96906	MS90725-82	.BOLT,MACHINE	EA	2
33	2	PAOZZ	5310-00-809-5997	96906	MS27183-17	.WASHER,FLAT	EA	2
33	3	PAOZZ	5306-00-225-8498	96906	MS90725-33	.BOI ,MACHINE	EA	4
33	4	PAOZZ	5310-00-407-9566	96906	MS35338-45	.WASHER,LOCK	EA	4
33	5	XBOZZ		72582	5108991	.GUARD,GENERATOR	EA	2
33	6	PAOZZ	5305-00-269-3209	96906	MS90725-58	.BOLT,MACHINE.....CCC	EA	2
33	6	PAOZZ	5305-00-244-3878	72582	454949	.SCREW,CAP,HEXAGON H 7/16-14X4.....CUA,CUB,CUC	EA	1
33	7	PAOZZ	5310-00-061-1258	24617	178551	.WASHER,LOCK.....CCC	EA	2
33	7	PAOZZ	5310-00-080-9785	96906	MS45904-80	.WASHER,LOCK 7/16 INT EXT TOOTH CAD.....CUA,CUB,CUC	EA	2
33	8	PAOZZ	5310-00-080-6004	96906	MS27183-14	.WASHER,FLAT.....CCC	EA	2
33	8	PAOZZ	5310-00-809-3079	96906	MS27183-19	.WASHER,FLAT PLAIN 9/16X13/8.....CUA,CUB,CUC	EA	2
33	9	PAOZZ	5365-00-461-4813	72582	5182628	.SPACER,SPECIAL.....CCC	EA	2
33	9	PAOZZ		72582	5147868	.SPACER,SLEEVE 7/8X15/16X 1 21/32 INCH.....CUA,CUB,CUC	EA	1
33	10	PAOZZ	5305-00-269-3211	96906	MS90725-60	.BOLT,MACHINE	EA	2
33	11	PAOZZ	5310-00-061-1258	24617	178551	.WASHER,LOCK	EA	2
33	12	XBOZZ		24617	MS15795-14	.WASHER,FLAT	EA	2
33	13	PAOZZ	2920-00-883-1223	72582	5134333	.STRAP GENERATOR ADJ.....CCC	EA	2
33	13	PAOZZ		72582	5147039	.STRAP,GENERATOR ADJ GENERATOR ADJ.....CUA,CUB,CUC	EA	1
33	14	PAOZZ	3030-00-017-9733	96906	MS51065-34-2	.BELT,DRIVE.....CCC	ST	2
33	14	PAOZZ	3030-00-740-3650	72582	5100366	.BELTS,V,MATCHED SET 43 INCH X 3/8 X 38 DEGREES....CUA,CUB,CUC	SE	1
33	15	XBOZZ	5305-00-688-2111	24617	186612	.BOLT,MACHINE.....CCC	EA	4
33	15	XBOZZ		72582	106337	.BOLT 7/16-14X 3/8.....CUA,CUB,CUC	EA	1
33	16	PAOZZ	5310-00-061-1258	24617	178551	.WASHER,LOCK.....CCC	EA	4
33	16	PAOZZ	5310-00-080-9785	96906	MS45904-80	.WASHER,LOCK 7/16 INT EXT TOOTH CAD.....CUA,CUB,CUC	EA	2
33	17	PBOZZ	5365-00-001-5102	72582	5125294	.SPACER.....CCC	EA	2
33	17	XDOZZ		72582	5164360	.WASHER 15/32X15/16X5/32.....CUA,CUB,CUC	EA	1
33	18	PAOZZ	5305-00-543-2419	96906	MS90728-61	.BOLT,MACHINE	EA	6
33	19	PAOZZ	5310-00-061-1258	24617	178551	.WASHER,LOCK	EA	6
33	20	XBOZZ		72582	5126936	.BRACKET,GENERATOR.....CCC	EA	2
33	20	XBOZZ	2920-00-932-4847	72582	5136712	.BRACKET,GENERATOR.....CUA,CUB,CUC	EA	1
33	21	PAOZZ		97403	13222E9865	.CABLE ASSY,ELECTRIC	EA	1
33	22	PAOFF	2920-00-391-2989	16764	1105993	.GENERATOR ASSY,24 VOLT.....CCC	EA	2
33	22	PAOFF		19728	GHT6002TS	.GENERATOR,ENGINE AC 18V 18AMP NEG GRD.....CUA,CUB,CUC	EA	1

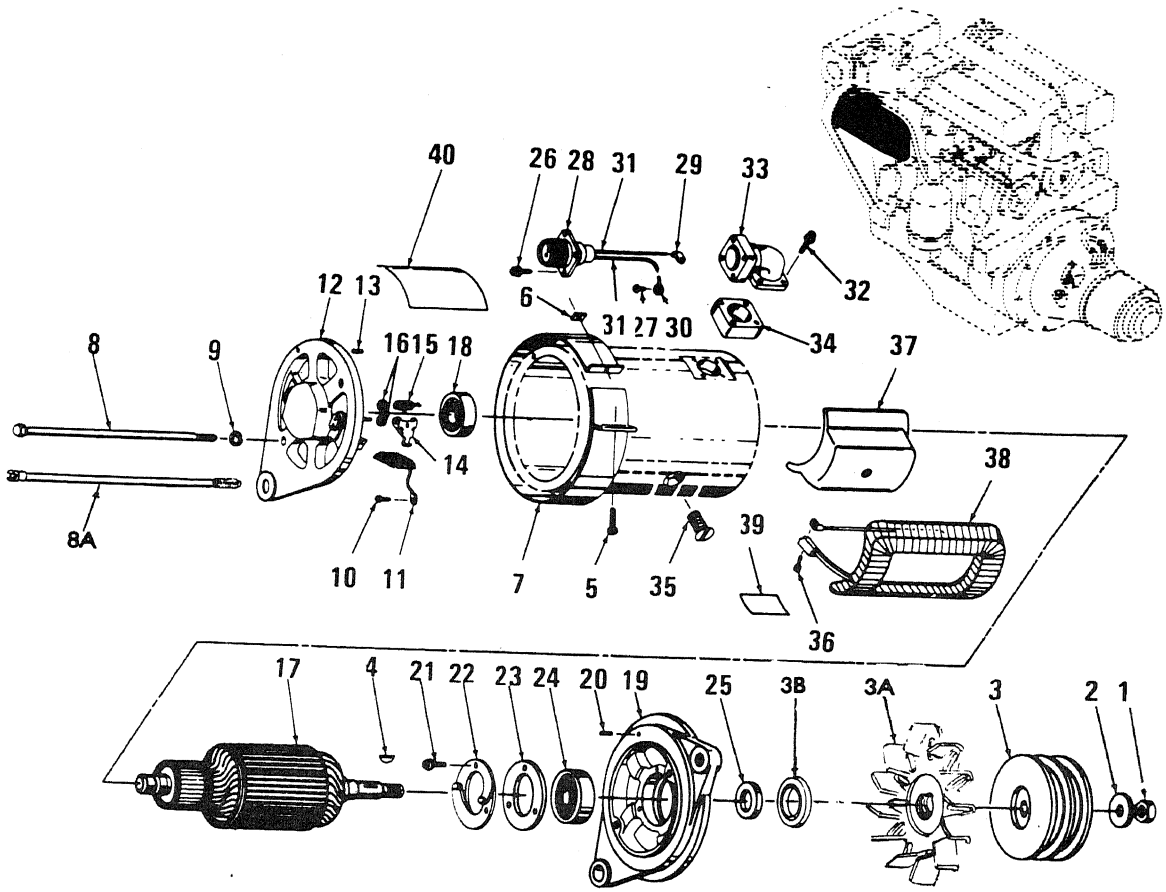

Figure 34. Generator

(1) ILLUSTRATION (a) FIG NO.	(b) ITEM NO.	(2) SMR CODE	(3) NATIONAL STOCK NUMBER	(4) FSCM	(5) PART NUMBER	(6) DESCRIPTION USABLE ON CODE	(7) U/M	(8) QTY INC IN UNIT
34	1	XBOZZ		16764	274983	..NUT PLAIN HEXAGON.....CCC	EA	4
34	1	XDOZZ		19728	90-727	..NUT AND WASHER PK.....CUA,CUB,CUC	EA	1
34	2	PAOZZ		16764	1918043	..WASHER, FLAT.....CCC	EA	4
34	3	PAOZZ		72582	5121246	..PULLEY, GROOVE.....	EA	2

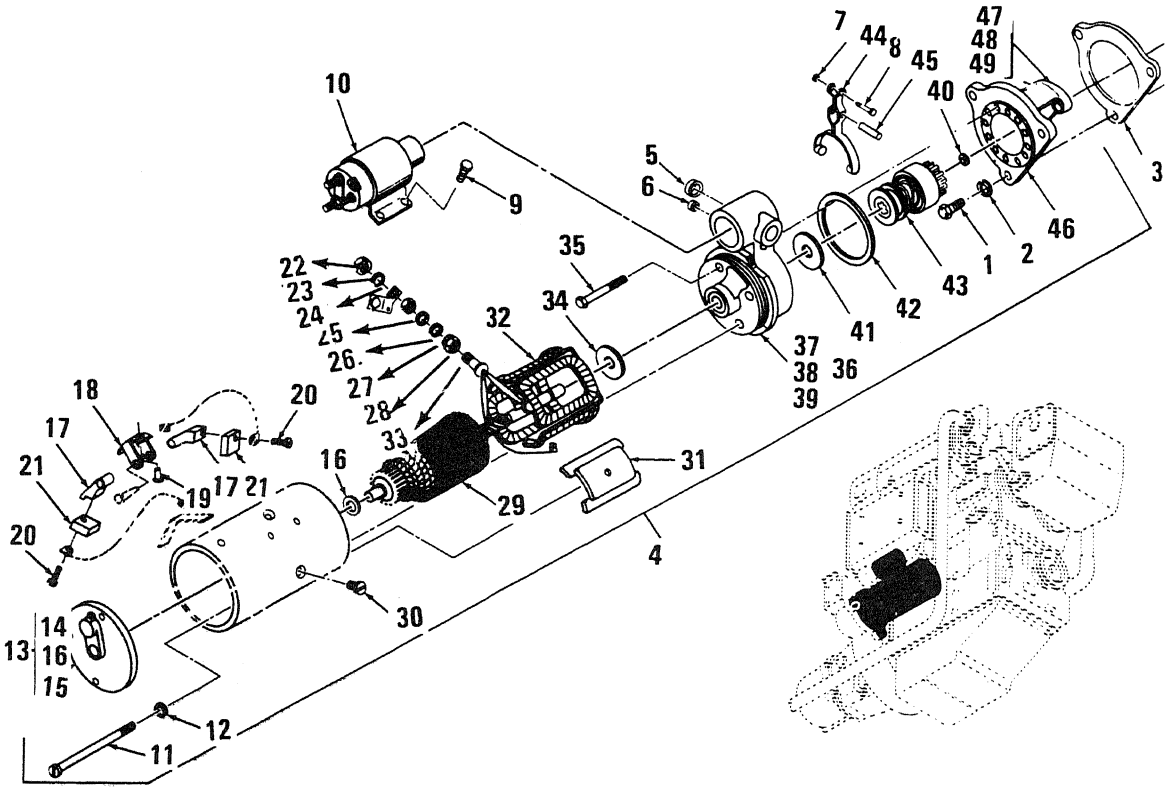

Figure 35. Cranking Motor (Starter)

(1) ILLUSTRATION (a) FIG NO	(b) ITEM NO.	(2) SMR CODE	(3) NATIONAL STOCK NUMBER	(4) FSCM	(5) PART NUMBER	(6) DESCRIPTION USABLE ON CODE	(7) U/M	(8) QTY INC IN UNIT
35	1	PAOZZ	5306-00-064-5356	16764	9418228	.BOLT,MACHINE MOTOR MTG,5/8-11 X 1 3/4 12 PNT.....	EA	3
35	2	PAOZZ	5310-00-820-6653	96906	MS35338-50	.WASHER,LOCK MOTOR BOLT,5/8 IN.....	EA	6
35	3	XAOZZ		72582	5130995	.GASKET.....	EA	2
35	4	PAOFF	2920-00-229-2668	16764	1113221	.MOTOR GRANKING 24 VOLT.....	EA	2

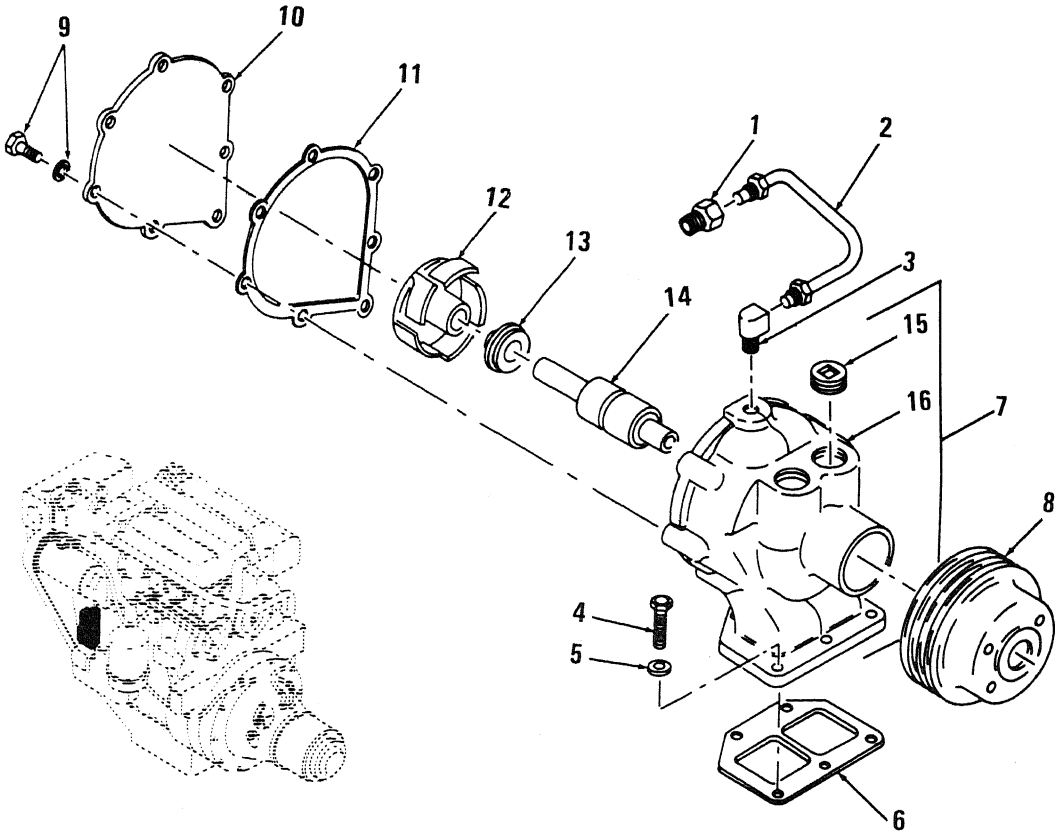

Figure 36. Water Pump

(1) ILLUSTRATION (a) FIG NO	(b) ITEM NO	(2) SMR CODE	(3) NATIONAL STOCK NUMBER	(4) FSCM	(5) PART NUMBER	(6) DESCRIPTION USABLE ON CODE	(7) U/M	(8) QTY INC IN UNIT
36	1	PAOZZ	4730-00-540-2612	72582	137405	.CONNECTOR,TUBE.....	EA	2
36	2	PAOZZ	4710-00-001-3379	72582	5123166	.TUBE ASSEMBLY,METAL VENT,WATER PUMP.....	EA	2
36	3	PAOZZ	4730-00-277-8273	72582	137421	.ELBOW.....	EA	2
36	4	PAOZZ	5306-00-226-4826	96906	MS90728-33	.BOLT,MACHINE WATER PUMP,5/16-18 X 7/8 IN.....	EA	10
36	5	PAOZZ	5310-00-407-9566	96906	MS35338-45	.WASHER,LOCK WATER PUMP,5/16 IN.....	EA	10
36	7	PAOZZ	2930-00-246-5305	72582	5144686	.PUMP ASSEMBLY FRESH WATER RH.....	EA	2
36	15	XDOZZ	4730-00-152-6233	72582	5145009	.PLUG,PIPE FRESH WATER.....	EA	2

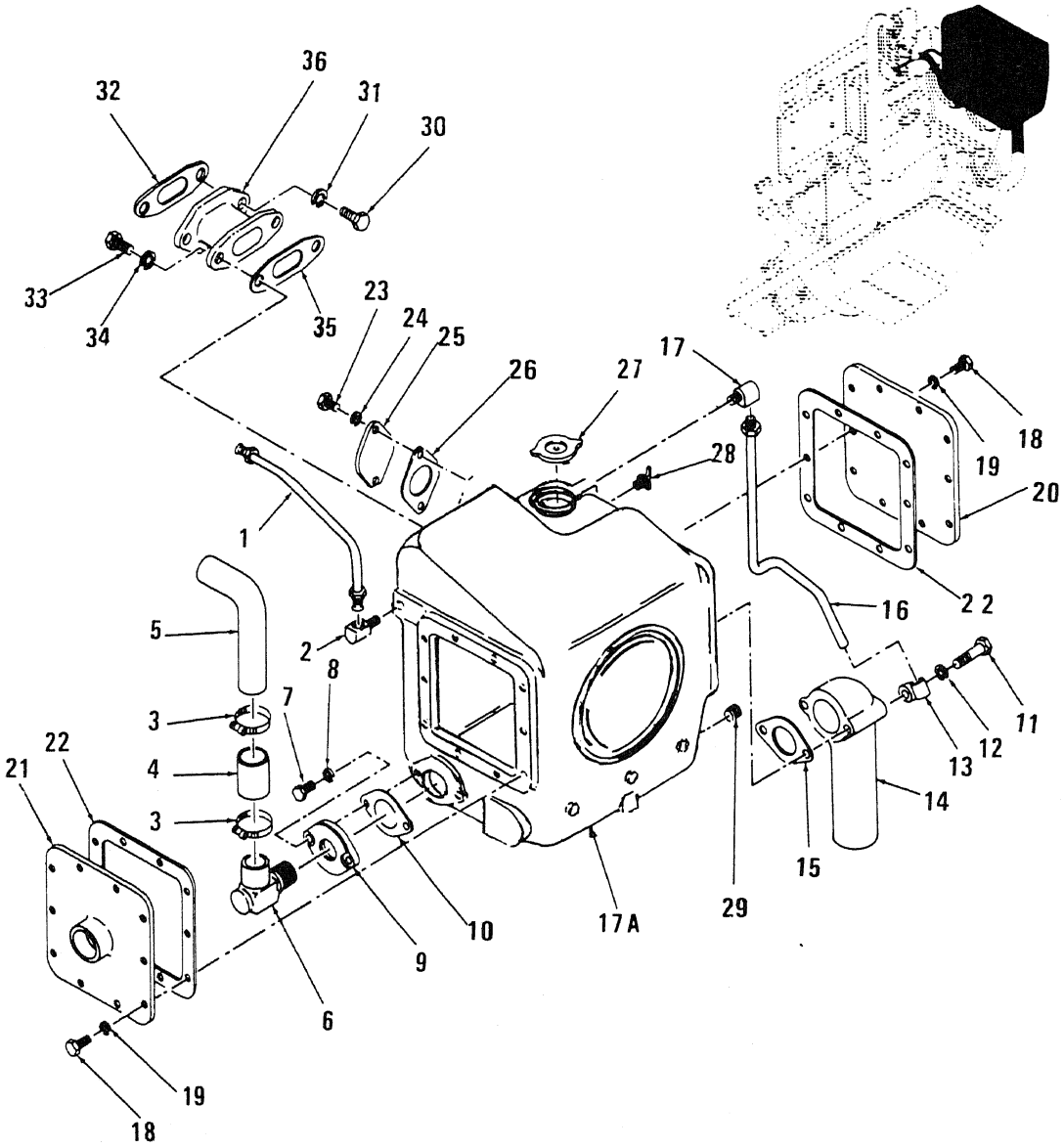

Figure 37. Expansion Tank

(1) ILLUSTRATION (a) FIG NO	(b) ITEM NO	(2) SMR CODE	(3) NATIONAL STOCK NUMBER	(4) FSCM	(5) PART NUMBER	(6) DESCRIPTION USABLE ON CODE	(7) U/M	(8) QTY INC IN UNIT
37	1	PBOZZ	4720-00-432-1266	72582	5126315	.TUBE ASSY,VENT	EA	2
37	2	XBOZZ		24617	137421	.ELBOW,TUBE	EA	2
37	3	PAOZZ	4730-00-202-8970	72582	5186840	.CLAMP WATER BYPASS	EA	4
37	4	PAOZZ	4720-00-278-5050	72582	5156170	.HOSE,NONMETALLIC WATER BYPASS	EA	2
37	5	XBOZZ		72582	5122563	.TUBE WATER BYPASS	EA	2
37	6	XBOZZ	4730-00-019-4727	72582	5181801	.ELBOW,PIPE TO HOSE WATER BYPASS	EA	2
37	7	PAOZZ	5306-00-226-4826	96906	MS90728-33	.BOLT,MACHINE	EA	4
37	8	XBOZZ	4730-00-902-1949	72582	5119425	.FLANGE,PIPE	EA	1
37	10	PAOZZ	5330-00-613-9397	72582	5116357	.GASKET WATER BYPASS	EA	2
37	11	XDOZZ	5306-00-021-2517	24617	179826	.BOLT,MACHINE 5/16-18 X 12	EA	1
37	12	PAOZZ	5310-00-407-9566	96906	MS35338-45	.WASHER,LOCK	EA	4
37	13	PAOZZ	5340-00-282-7532	96906	MS21333-56	.CLAMP	EA	2
37	14	XBOZZ		72582	5121203	.ELBOW	EA	2
37	15	PAOZZ	5330-00-613-9397	72582	5116357	.GASKET	EA	2
37	16	XBOZZ		72582	5122569	.TUBE,OVERFLOW	EA	2
37	17	XBOZZ	4730-00-640-1051	72582	137422	.ELBOW	EA	2
37	17A	XBOZZ		72582	5125066	.TANK ASSY EXPANSION	EA	2
37	18	XBOZZ	5306-00-225-8500	96906	MS90825-35	.BOLT,MACHINE	EA	10
37	19	PAOZZ	5310-00-407-9566	96906	MS35338-45	.WASHER,LOCK	EA	40
37	20	XBOZZ		72582	5186976	.COVER CYLINDER HEAD WATER HOLE	EA	2
37	21	XBOZZ	2930-00-590-9041	72582	5121893	.COVER,INLET	EA	2
37	22	PAOZZ	5330-00-292-3482	72582	5167764	.GASKET HEAT EXCHANGER	EA	4
37	23	PAOZZ	5306-00-226-4826	96906	MS90728-33	.BOLT,MACHINE	EA	4
37	24	PAOZZ	5310-00-407-9566	96906	MS35338-45	.WASHER,LOCK	EA	4
37	25	XBOZZ		72582	5125655	.COVER,REAR	EA	2
37	26	PAOZZ	5330-00-469-8234	72582	5119206	.GASKET REAR COVER	EA	2
37	27	PAOZZ	2930-00-462-8114	72582	850901	.CAP,FILLER OPENING	EA	2
37	28	PAOZZ	4820-00-845-1096	72582	148344	.DRAINCOCK	EA	2
37	29	PAOZZ	5340-00-919-2876	72582	5109157	.PLUG,PIPE	EA	2
37	30	PAOZZ	5305-00-543-2419	96906	MS90728-61	.BOLT,MACHINE	EA	4
37	31	PAOZZ	5310-00-061-1258	24617	178551	.WASHER,LOCK	EA	4
37	32	XAOZZ		72582	5116212	.GASKET,BRACKET	EA	2
37	33	PAOZZ	5305-00-543-2419	96906	MS90728-61	.BOLT,MACHINE	EA	8
37	34	PAOZZ	5310-00-061-1258	24617	178551	.WASHER,LOCK	EA	4
37	35	XAOZZ		72582	5116242	.GASKET COVER,WATER HOLE	EA	2
37	36	XBOZZ		72582	5119158	.BRACKET HEAT EXCHANGER	EA	2

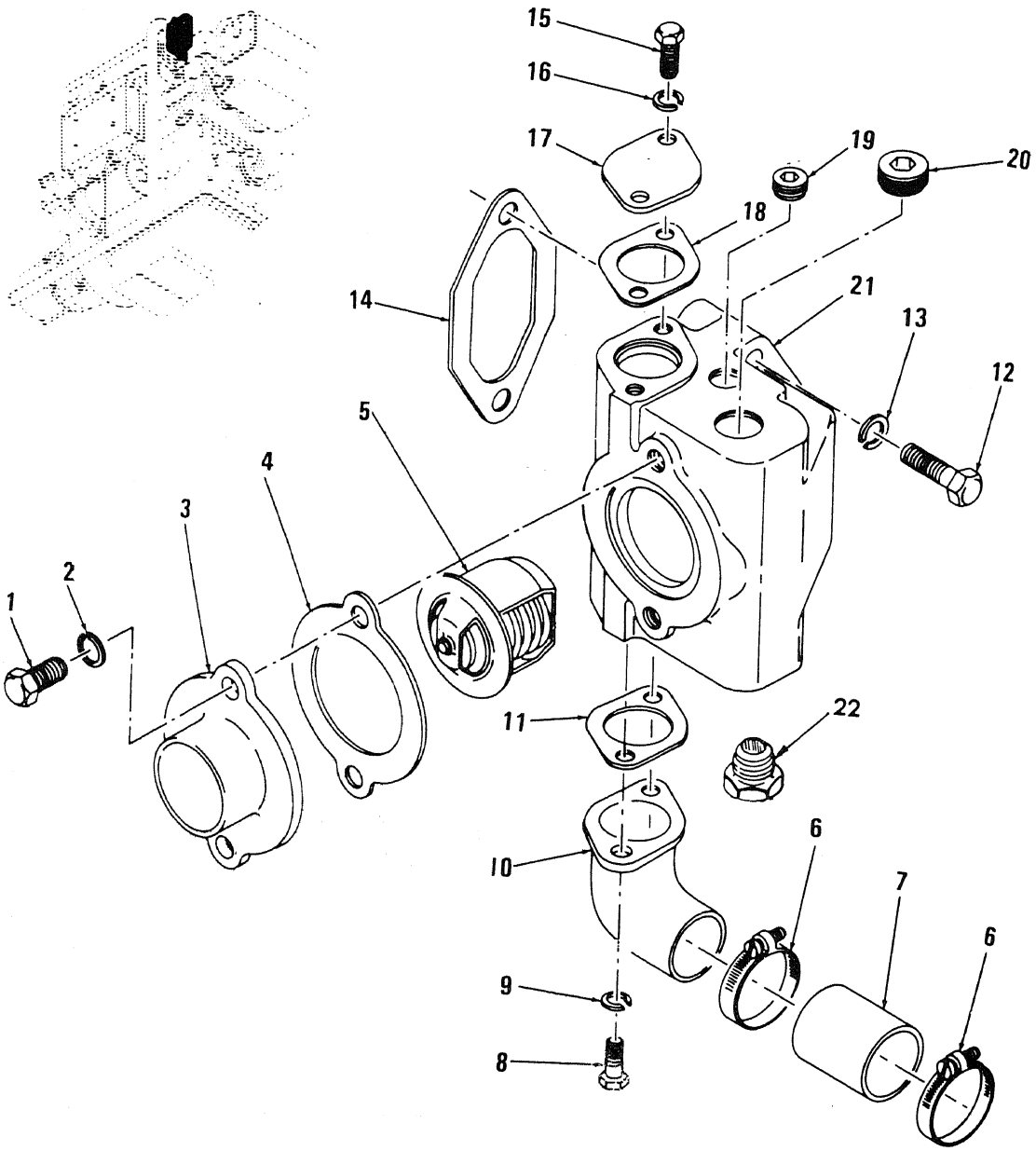

Figure 38. Thermostat and Housing

(1) ILLUSTRATION (a) FIG NO	(b) ITEM NO	(2) SMR CODE	(3) NATIONAL STOCK NUMBER	(4) FSCM	(5) PART NUMBER	(6) DESCRIPTION USABLE ON CODE	(7) U/M	(8) QTY INC IN UNIT
38	1	PAOZZ	5306-00-226-4824	96906	MS90728-31	.BOLT,MACHINE	EA	4
38	2	PAOZZ	5310-00-407-9566	96906	MS35338-45	.WASHER,LOCK THERMOSTAT HOUSING,3/8 IN	EA	4
38	3	XBOZZ		72582	5119120	.FLANGE THERMOSTAT HOUSING	EA	2
38	4	KBOZZ		72582	5128139	.GASKET FLANGE,THERMOSTAT HOUSING	EA	2
38	5	PAOZZ	6620-00-792-9032	72582	3146695	.THERMOSTAT,FLOW CON	EA	2
38	6	PAOZZ	4730-00-202-8970	72582	5186840	.CLAMP HOSE	EA	4
38	7	PAOZZ	4720-00-278-5050	72582	5156170	.HOSE,NONMETALLIC	EA	2
38	8	PAOZZ	5306-00-226-4828	96906	MS90728-35	.BOLT,MACHINE THERMOSTAT HOUSING MTG,3/8-16 X 2-1/8 IN	EA	4
38	9	PAOZZ	5310-00-407-9566	96906	MS35338-45	.WASHER LOCK OUTLET FLANGE,THERMOSTAT,5/16 IN	EA	4
38	10	PAOZZ	4730-00-019-4727	72582	5181801	.ELBOW	EA	2
38	11	PAOZZ	5330-00-613-9397	71582	5116357	.GASKET	EA	2
38	12	PAOZZ	5305-00-018-7069	24617	108608	.BOLT,MACHINE THERMOSTAT,3/8-16 X 2 1/8 IN.LG	EA	4
38	13	PAOZZ	5310-00-637-9541	96906	MS35338-46	.WASHER,LOCK THERMOSTAT BOLT,3/8 IN	EA	4
38	14	PAOZZ	5330-00-055-1584	72582	5116242	.GASKET THERMOSTAT HOUSING	EA	2
38	15	XBOZZ		96906	01028PC11	.BOLT,MACHINE	EA	4
38	16	PAOZZ	5310-00-637-9541	96906	MS35338-46	.WASHER,LOCK THERMOSTAT HSG MTG	EA	4
38	17	XBOZZ		72582	5119426	.FLANGE OUTLET	EA	2
38	18	PAOZZ	5330-00-055-1587	72582	5119427	.GASKET FLANGE,THERMOSTAT	EA	2
38	19	PAOZZ	4730-00-152-6073	72582	5145014	.PLUG,PIPE	EA	4
38	20	PAOZZ	4730-00-152-6070	72582	5115214	.PLUG,PIPE	EA	4
38	21	XBOZZ	2930-00-112-0437	72582	5123247	.HOUSING ASSEMBLY THERMOSTAT	EA	2
38	22	XDOZZ	4730-00-608-1777	24617	859151	.ADAPTER CAPILLARY,WATER TEMP GAGE	EA	1

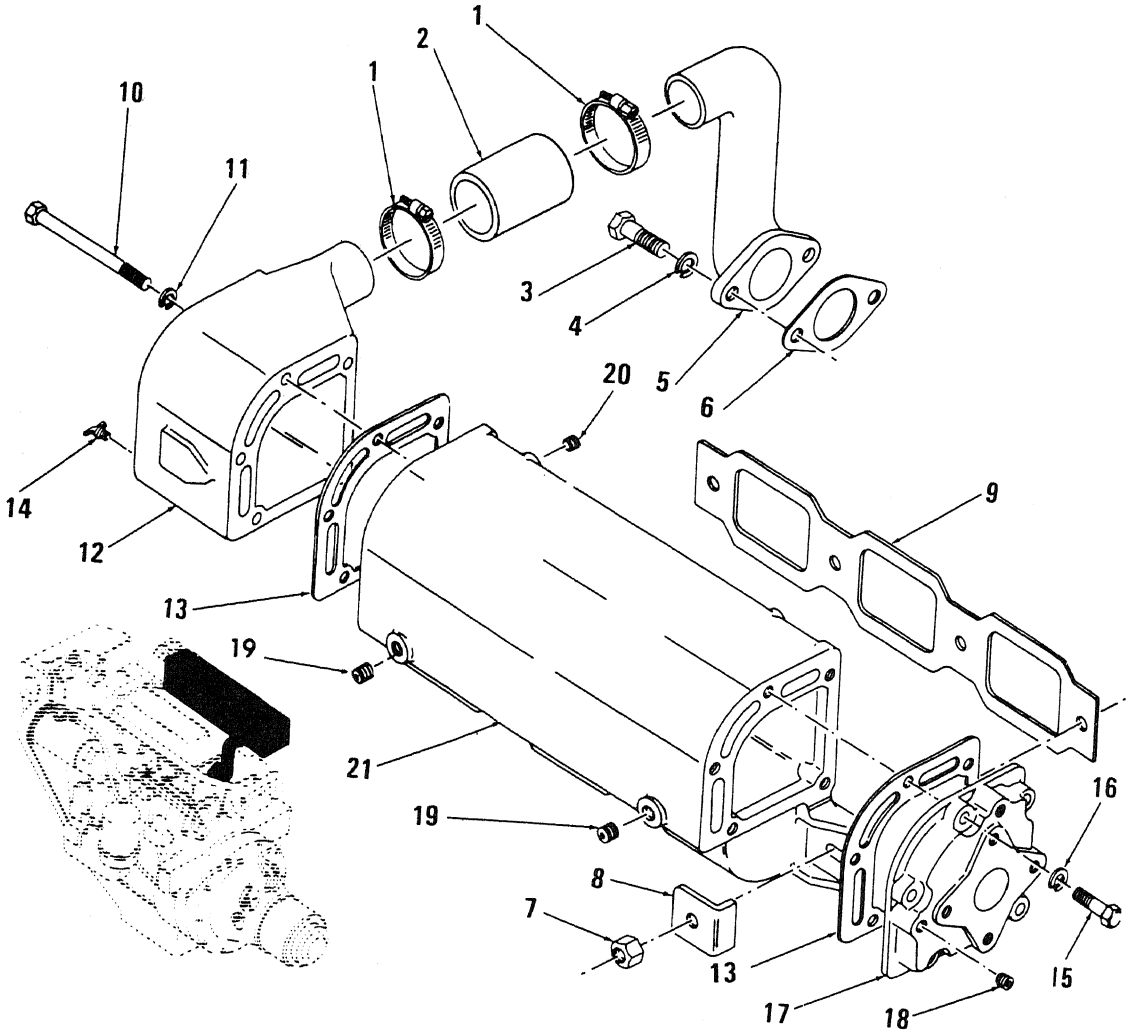

Figure 39. Exhaust Manifold

(1) ILLUSTRATION (a) FIG NO	(b) ITEM NO.	(2) SMR CODE	(3) NATIONAL STOCK NUMBER	(4) FSCM	(5) PART NUMBER	(6) DESCRIPTION USABLE ON CODE	(7) U/M	(8) QTY INC IN UNIT
39	1	PAOZZ	4730-00-921-5387	72582	5186841	.CLAMP,HOSE	EA	4
39	2	XBOZZ		72582	5140551	.HOSE	EA	2
39	4	PAOZZ	5310-00-637-9541	96906	MS35338-46	.WASHER,LOCK EXHAUST MANIFOLD,3/8 IN	EA	10
39	5	XBOZZ		72582	5130451	.ELBOW WATER CONNECTION	EA	2
39	6	XDOZZ	5330-00-055-1584	72582	5116242	.GASKET CYLINDER HEAD WATER HOLE	EA	2
39	7	PAOZZ	5310-00-880-7745	96906	MS51968-11	.NUT,HEXAGON EXHAUST MANIFOLD,7/16-21 IN	EA	8
39	8	PAOZZ	5310-00-595-8121	72582	5188273	.WASHER,FLAT DISHED,EXHAUST MANIFOLD STUD MTG 1-1/4 IN.OD	EA	8
39	9	KBOZZ		72582	5116205	.GASKET EXHAUST MANIFOLD	EA	2
39	10	PAOZZ	5305-00-018-6189	72582	186289	.BOLT,MACHINE EXHAUST MANIFOLD,3/8-16 X 5 IN.LG	EA	10
39	11	PAOZZ	5310-00-637-9541	96906	MS35338-46	.WASHER,LOCK EXHAUST MANIFOLD	EA	10
39	12	XBOZZ		72582	5122517	.FLANGE EXHAUST MANIFOLD	EA	2
39	13	XADZZ		72582	5119208	.GASKET WATER DISCHARGE FLANGE	EA	4
39		PAOZZ	4820-00-845-1096	24617	148344	.DRAINCOCK,SHUTOFF EXHAUST MANIFOLD,5/16 IN.DRAIN,1/4 IN.NPT	EA	2
39	15	PAOZZ	5305-00-418-2843	72582	454906	.BOLT,MACHINE	EA	10
39	16	PAOZZ	5310-00-637-9541	96906	MS35338-46	.WASHER,LOCK EXHAUST MANIFOLD	EA	10
39	17	XBOZZ		72582	5121175	.FLANGE	EA	2
39	18	PAOZZ	5365-00-708-7865	72582	5145011	.PLUG,PIPE	EA	2
39	19	PAOZZ	4730-00-187-4207	72582	5145010	.PLUG,PIPE EXHAUST MANIFOLD,1/4-18 NPTF	EA	4
39	20	XDOZZ	4730-00-152-6233	72582	5145009	.PLUG,PIPE EXHAUST MANIFOLD,1/8-27 NPTF	EA	4
39	21	XBOZZ		72582	5145201	.MANIFOLD EXHAUST WATER COOLED	EA	2

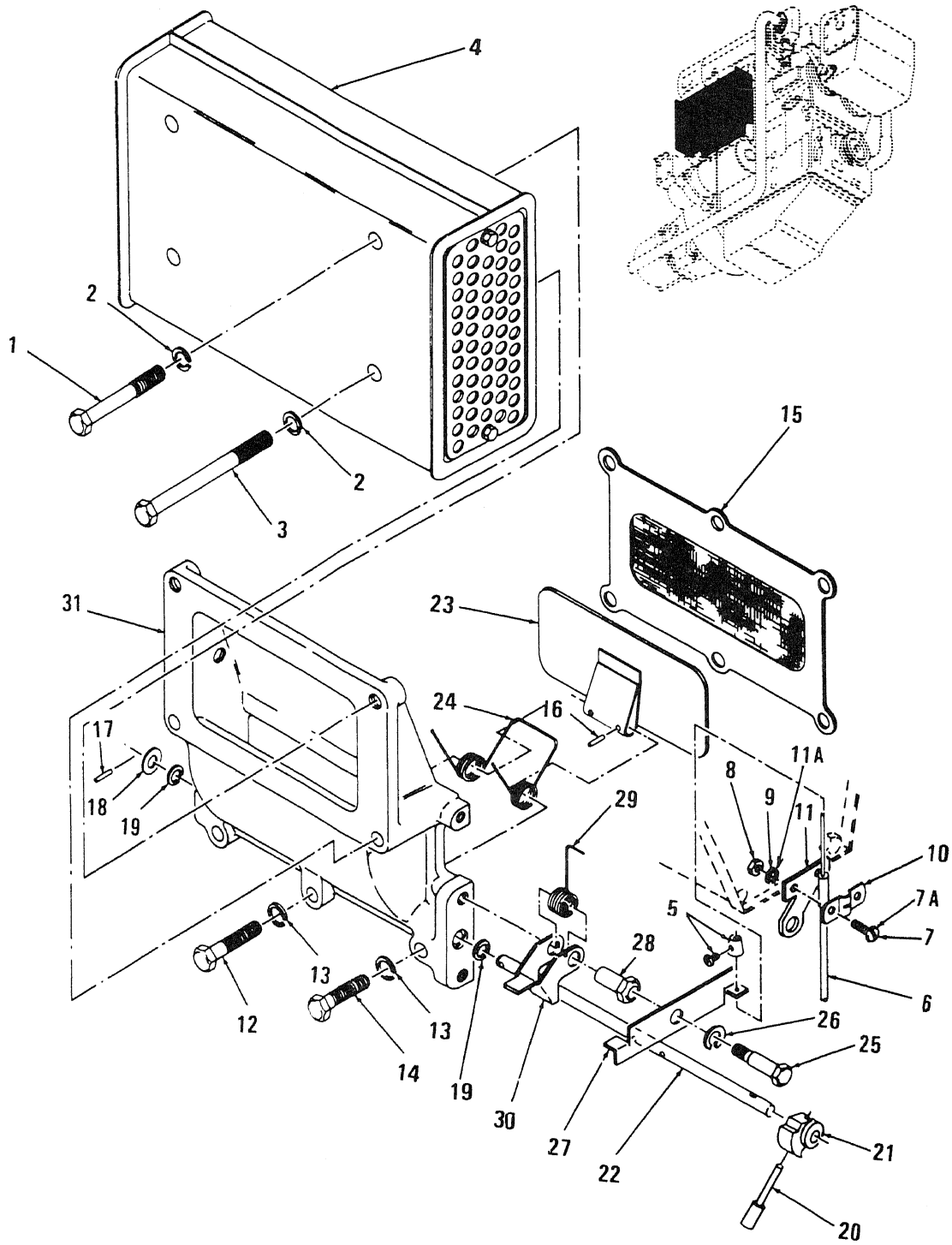

Figure 40. Air Silencer, Emergency Stop Cable and Air Shut-Down Housing

(1) ILLUSTRATION (a) FIG NO.	(b) ITEM NO.	(2) SMR CODE	(3) NATIONAL STOCK NUMBER	(4) FSCM	(5) PART NUMBER	(6) DESCRIPTION / USABLE ON CODE	(7) U/M	(8) QTY INC IN UNIT
40	1	XBOZZ	5306-00-637-9623	32770	186285	.BOLT,MACHINE AIR SILENCER,3/8-16 X 4 IN	EA	4
40	2	PAOZZ	5310-00-637-9541	96906	MS35338-46	.WASHER,LOCK AIR SILENCER	EA	8
40	3	XBOZZ		32770	272547	.BOLT,MACHINE AIR SILENCER	EA	4
40	4	XBOZZ		18265	SAM00-0127	.SILENCER,AIR	EA	2
40	5	XBOZZ	3040-00-233-8914	41625	AC37693	.CABLE,CONTROL EMERG	EA	2
40	6	PAOZZ	3040-00-229-2637	97403	13219E1132-2	.CABLE,CONTROL,EMERG CONTROL EMERGENCY STOP PORT 0.102 IN	EA	1
40	6	PAOZZ	3040-00-233-8914	97403	13219E1132-1	.CABLE,CONTROL EMERG EMERGENCY STOP,STBD 137 IN	EA	1
40	7	PAOZZ	5305-00-984-7341	96906	MS35191-273	.SCREW,MACHINE CLAMP	EA	4
40	7A	PAOZZ	5305-00-989-7435	96906	MS35207-264	.SCREW,MACH CUA,CUB,CUC	EA	11
40	8	PAOZZ	5310-00-934-9765	96906	MS35650-304	.NUT,HEXAGON	EA	4
40	9	PAOZZ	5310-00-933-8120	96906	MS35338-138	.WASHER,LOCK	EA	4
40	10	PAOZZ	2030-00-933-1630	41625	A31509	.CLAMP	EA	2
40	11	XBOZZ		97403	13219E1178	.BRACKET EMERGENCY SHUTOFF	EA	2
40	11A	PAOZZ	5310-00-531-9515	88044	AN960C416	.WASHER,FLAT CUA,CUB,CUC	EA	4
40	12	PAOZZ	5305-00-354-1227	72582	5157244	.BOLT,MACHINE	EA	4
40	13	PAOZZ	5310-00-637-9541	96906	MS35338-46	.WASHER,LOCK	EA	6
40	14	PAOZZ	5305-00-269-3216	96906	MS90725-66	.BOLT,MACHINE	EA	2
40	15	PAOZZ	5330-00-996-3720	24617	5196053	.SCREEN BLOWER AIR INLET	EA	1
40	16	PAOZZ	1450-00-775-1359	72582	273436	.PIN AIR INLET HOUSING SHUTDOWN VALVE	EA	4
40	17	PAOZZ	1450-00-775-1359	72582	273436	.PIN,ROLLER AIR INLET HOUSING	EA	4
40	18	XBOZZ	5310-00-080-6004	96906	MS527183-14	.WASHER,FLAT AIR INLET HOUSING SHUTDOWN VALVE	EA	2
40	19	PAOZZ	5330-00-682-7193	72582	5182977	.SEAL RING,AIR INLET HOUSING	EA	4
40	20	XBOZZ	2815-00-788-6639	72582	5114974	.HANDLE ASSEMBLY,AIR AIR INLET HOUSING SHUTDOWN	EA	2
40	21	XBOZZ	2910-00-765-5331	72582	5122623	.CAM,CONTROL AIR INLET HOUSING SHUTDOWN	EA	2
40	22	XBOZZ	2815-00-113-7926	72582	5116444	.SHAFT,AIR INLET IAR INLET HOUSING	EA	2
40	23	XBOZZ	2815-00-113-7925	72582	5116456	.VALVE,AIR INLET AIR INLET HOUSING SHUTDOWN	EA	2
40	24	PAOZZ	5360-00-745-7791	72582	5111904	.SPRING AIR INLET HOUSING SHUTDOWN	EA	2
40	25	XBOZZ		24617	179803	.BOLT,MACHINE	EA	2
40	26	PAOZZ	5310-00-637-9541	96906	MS35338-46	.WASHER,LOCK	EA	2
40	27	PAOZZ	2815-00-229-3309	97403	13219E1179	.LINK EMERGENCY SHUTOFF	EA	2
40	28	XBOZZ		72582	5143836	.SPACER	EA	2
40	29	PAOZZ	5360-00-712-5747	72582	5114124	.SPRING LATCH	EA	2
40	30	XBOZZ	2815-00-712-5749	72582	5114727	.LATCH AIR INLET HSG	EA	2
40	31	XBOZZ		72582	5129291	.HOUSING AIR INLET	EA	2

FIGURES 41 AND 42 NOT APPLICABLE

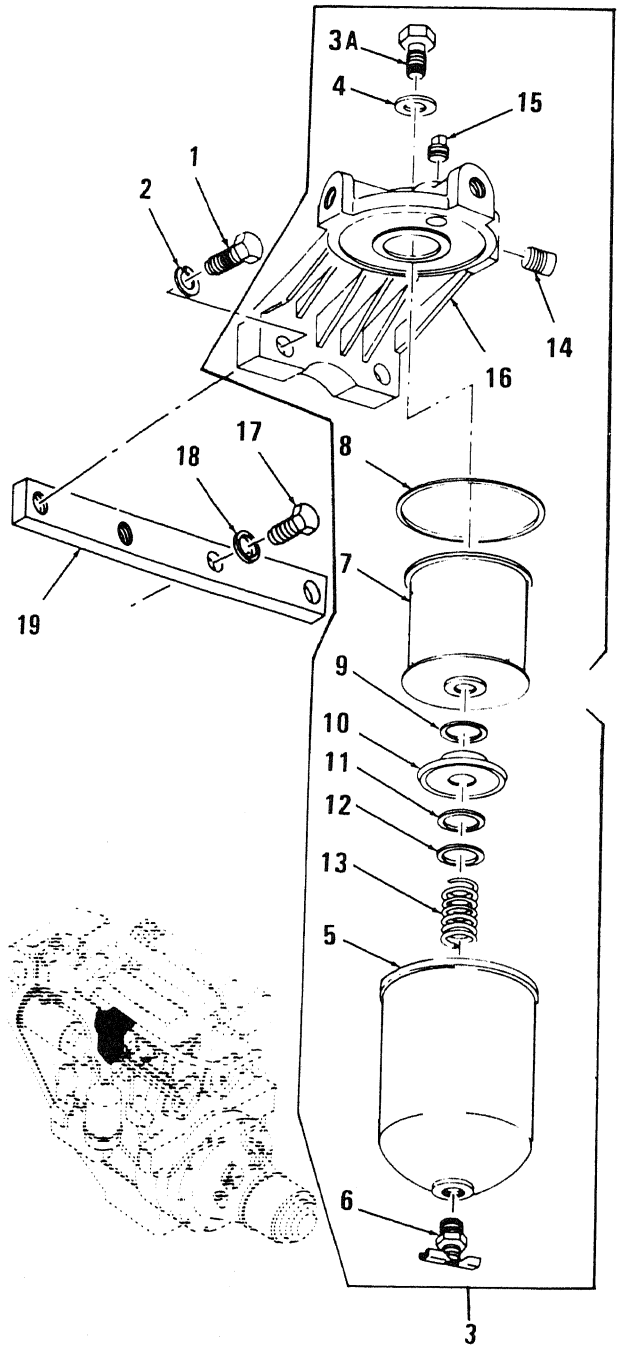

Figure 43. Fuel Filter

(1) ILLUSTRATION (a) FIG NO.	(b) ITEM NO.	(2) SMR CODE	(3) NATIONAL STOCK NUMBER	(4) FSCM	(5) PART NUMBER	(6) DESCRIPTION USABLE ON CODE	(7) U/M	(8) QTY INC IN UNIT
43	1	PAOZZ	5305-00-269-3210	96906	MS90725-59	.BOLT,MACHINE	EA	4
43	2	PAOZZ	5310-00-637-9541	96906	MS35338-46	.WASHER,LOCK	EA	4
43	3	PAOZZ	4330-00-792-7343	72582	5573712	.FILTER ASSY FUEL OIL	EA	2
43	3A	PAOZZ	5306-00-604-7961	72582	5574118	.BOLT,MACHINE	EA	2
43	4	PAOZZ	5310-00-551-0433	72582	1503536	.GASKET COVER,FILTER	EA	2
43	5	XAOZZ		72582	5574125	..FILTER BODY,FLUID	EA	2
43	6	PAOZZ	4820-00-477-9779	72582	103647	.COCK,DRAIN	EA	2
43	7	PAOZZ	2910-00-890-2436	72582	5573261	.ELEMENT FUEL OIL FILTER	EA	2
43	8	XAOZZ		72582	5574161	.GASKET,COVER FILTER TO SHELL (FURNISHED W/ELEMENT)	EA	2
43	9	PAOZZ	5365-00-543-3615	72582	5574120	.RETAINER	EA	2
43	10	PAOZZ	5340-00-612-3134	72582	5574123	.SEAT	EA	2
43	11	PAOZZ	5330-00-612-3123	72582	5574126	.SEAL	EA	2
43	12	PAOZZ	5310-00-655-5893	24617	5573734	.WASHER	EA	2
43	13	PAOZZ	5360-00-619-8198	72582	5574124	.SPRING	EA	2
43	14	PAOZZ	5365-00-708-7865	72582	5145011	.PLUG,PIPE	EA	2
43	15	PAOZZ	4730-00-187-4207	72582	5145010	.PLUG,PIPE	EA	2
43	16	XAOZZ		72582	6436254	.HEAD,FLUID FILTER FUEL OIL FILTER	EA	2
43	17	PAOZZ	5305-00-269-3211	96906	MS90725-60	.BOLT,MACHINE	EA	4
43	18	PAOZZ	5310-00-637-9541	96906	MS35338-46	.WASHER,LOCK	EA	16
43	19	XBOZZ		72582	5122568	.BRACKET,MOUNT	EA	2

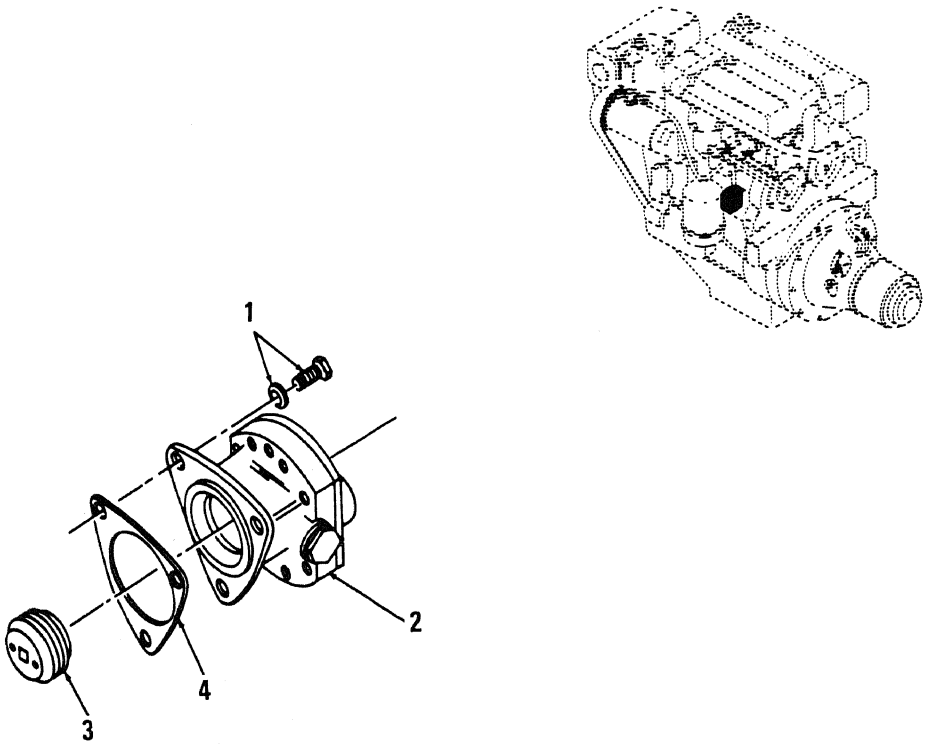

Figure 44. Fuel Pump

(1) ILLUSTRATION (a) FIG NO.	(b) ITEM NO.	(2) SMR CODE	(3) NATIONAL STOCK NUMBER	(4) FSCM	(5) PART NUMBER	(6) DESCRIPTION USABLE ON CODE	(7) U/M	(8) QTY INC IN UNIT
44	1	PAOZZ	5306-00-613-9396	72582	5118219	.BOLT,WITH SEAL WASHER.....	EA	6
44	2	PAOZZ	4320-00-175-9250	72582	5199560	.PUMP,ROTARY.....	EA	1
44	3	XAOZZ		72582	5154216	.COUPLING,SHAFT,RIGI DRIVE,FUEL PUMP.....	EA	2
44	4	PAOZZ	5330-00-212-6290	72582	5150193	.GASKET FUEL PUMP,TO GOVERNOR.....	EA	2

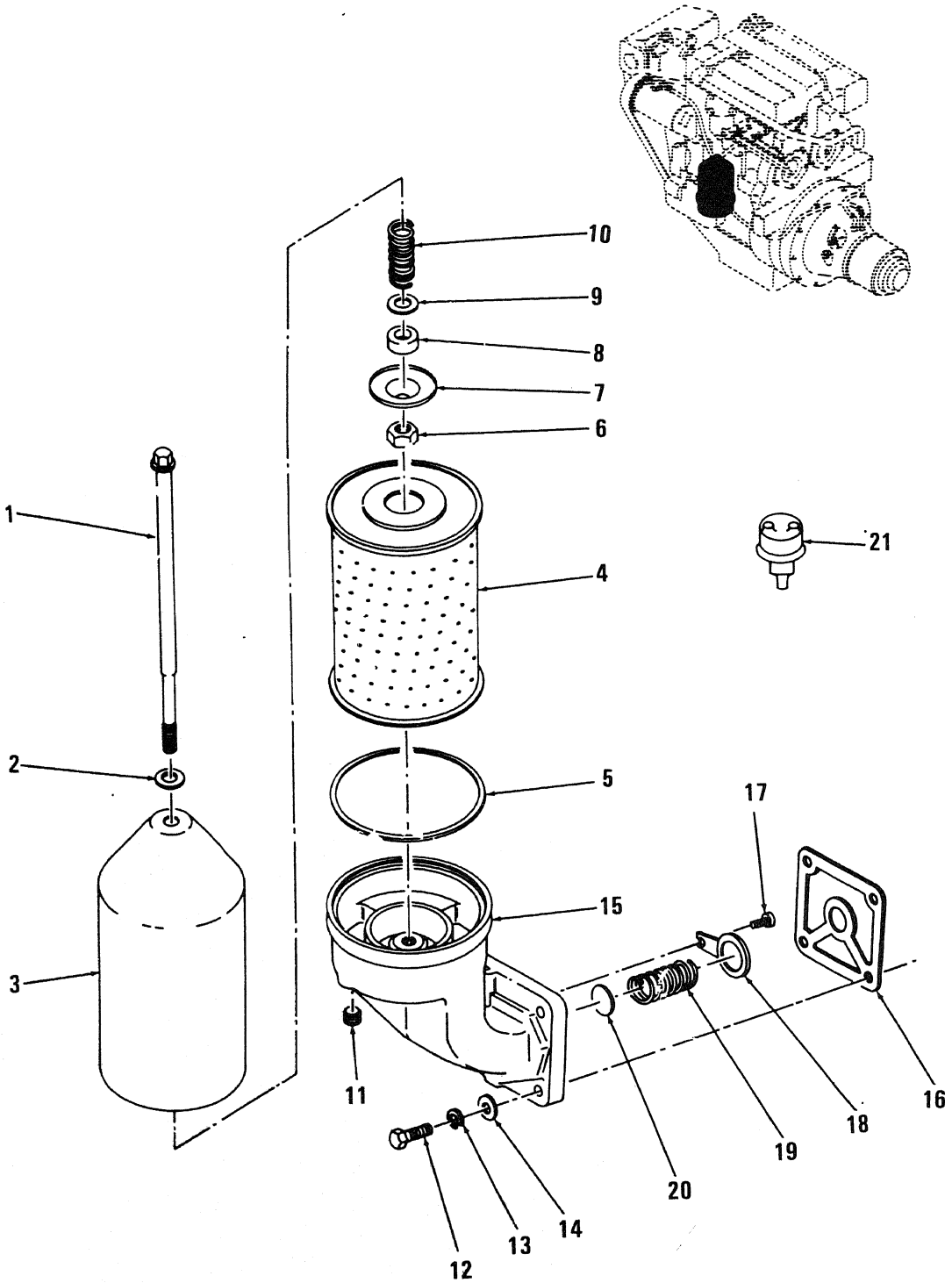

Figure 45. Engine Lubricating Oil Filter and Oil Pressure Sensor

(1) ILLUSTRATION (a) FIG NO.	(b) ITEM NO.	(2) SMR CODE	(3) NATIONAL STOCK NUMBER	(4) FSCM	(5) PART NUMBER	(6) DESCRIPTION USABLE ON CODE	(7) U/M	(8) QTY INC IN UNIT
45	1	PAOZZ	5307-00-765-4215	72582	5116427	.STUD CENTER,OIL FILTER	EA	2
45	2	XAOZZ		72582	1595620	.GASKET SHELL,OIL FILTER	EA	2
45	3	XBOZZ		72582	5574906	.SHELL OIL FILTER	EA	2
45	4	PAOZZ	2940-00-019-8087	72582	5574905	.ELEMENT OIL FILTER	EA	2
45	5	XAOZZ		72582	5573534	.GASKET,SHELL OIL FILTER (FURNISHED W/ELEMENT)	EA	2
45	6	PAOZZ	5310-00-136-5712	72582	122366	.NUT,JAM,HEXAGON OIL FILTER STUD CENTER,5/8-18	EA	2
45	7	XBOZZ	5330-00-629-6340	72582	5187309	.RETAINER,PACKING OIL FILTER ELEMENT	EA	2
45	8	PAOZZ	5330-00-604-8094	72582	5187310	.PACKING PREFORMED RETAINER NUT	EA	2
45	9	PAOZZ	5365-00-262-4701	72582	5154538	.WASHER FLAT FILTER ELEMENT SPRING SEAT	EA	2
45	10	PAOZZ	5360-00-801-8731	72582	5187308	.SPRING ELEMENT RETAINER,OIL FILTER	EA	2
45	11	XBOZZ	4730-00-187-4207	72582	5145010	.PLUG,SOCKET HD HEXAGON,1/4-18 NPTF,ADAPTOR	EA	2
45	12	PAOZZ	5305-00-543-2419	96906	MS90728-61	.BOLT,MACHINE ADAPTOR MTG,3/8-16 X 1-1/8 IN.LG	EA	8
45	13	PAOZZ	5310-00-637-9541	96906	MS35338-46	.WASHER,LOCK ADAPTOR MTG BOLT,3/8 IN.HOLE SIZE	EA	8
45	14	PAOZZ	5310-00-080-6004	96906	MS27183-14	.WASHER FLAT ADAPTOR MTG BOLT	EA	8
45	15	XBOZZ		72582	5134311	.ADAPTOR OIL FILTER	EA	2
45	16	KBOZZ		72582	5121205	.GASKET ADAPTOR,OIL FILTER	EA	2
45	17	PAOZZ	5305-00-930-3427	72582	450865	.SCREW,ROUND HEAD RETAINER MTG,12-24 X 3/4 IN.LG	EA	2
45	18	XBOZZ	2815-00-905-7917	72582	5134456	.RETAINER PRESSURE REGULATING SPRING,OIL FILTER	EA	2
45	19	PAOZZ	5360-00-930-3264	72582	5134477	.SPRING,HELICAL,COMP PRESSURE REGULATING,OIL FILTER	EA	2
45	20	PAOZZ	2940-00-944-6249	72582	5133431	.DISK,VALVE PRESSURE REGULATOR,OIL FILTER	EA	2
45	21	PAOZZ	5930-00-669-7872	72582	1506983	.SWITCH OIL PRESSURE SENSOR	EA	2

by
32
94
30
94
21
55
34
96
36
71
15
08
34
13
57
64
35
05
02

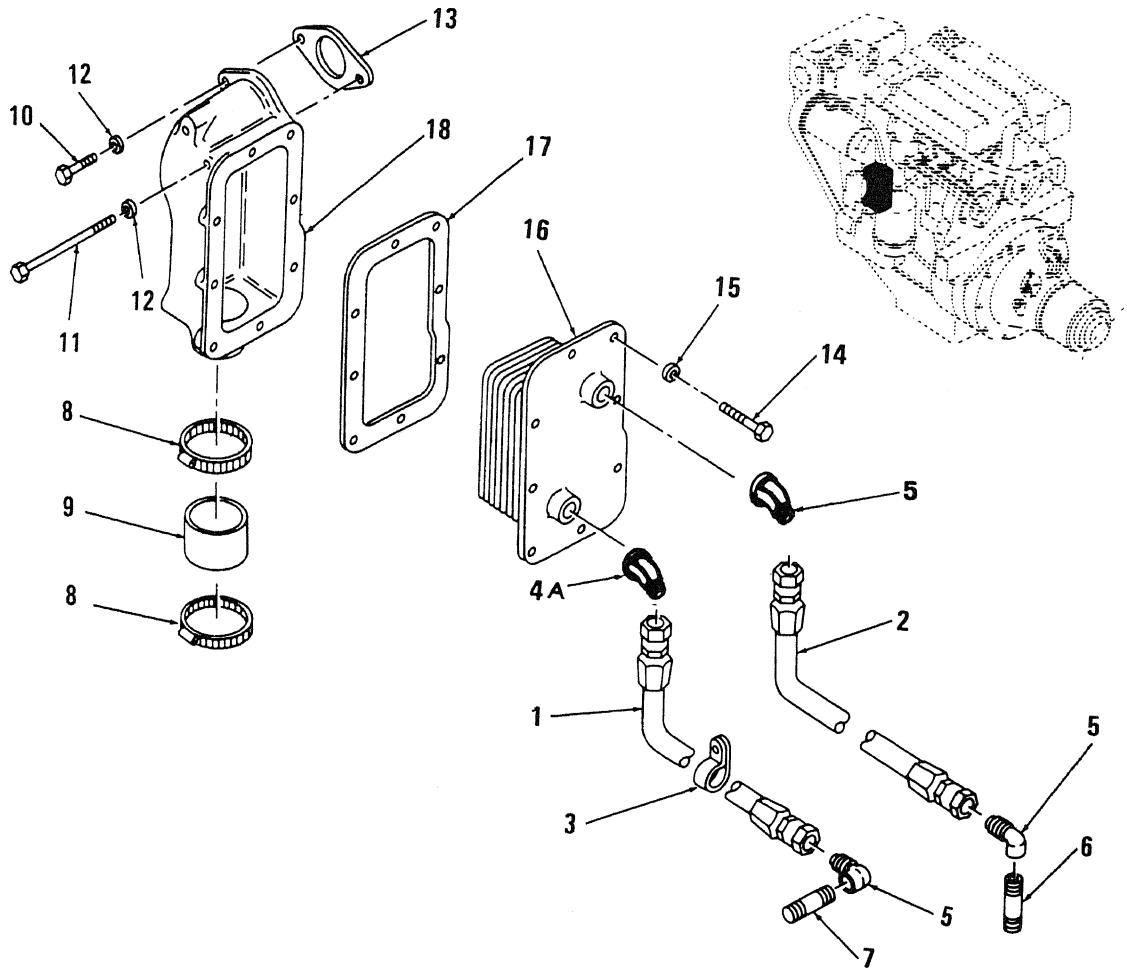

Figure 46. Transmission Oil Cooler

(1) ILLUSTRATION (a) FIG NO.	(b) ITEM NO.	(2) SMR CODE	(3) NATIONAL STOCK NUMBER	(4) FSCM	(5) PART NUMBER	(6) DESCRIPTION USABLE ON CODE	(7) U/M	(8) QTY INC IN UNIT
46	1	PAOZZ	4720-00-174-3004	72582	5123320	.HOSE ASSEMBLY OIL INLET,OIL COOLER TO GEAR SUMP,MARINE GEAR, 38 X 13/32 IN.ID.....	EA	2
46	2	PAOZZ	4720-00-413-3406	72582	5123318	.HOSE ASSEMBLY OIL OUTLET SELECTOR VALVE TO OIL COOLER,MARINE GEAR,47 X 13/32 IN.ID.....	EA	2
46	3	PAOZZ	5340-00-499-3597	72582	5171509	.CLIP TUBE,GEAR TO COOLER HOSES.....	EA	8
46	4	PAOZZ	4730-00-254-6215	96906	MS39162-7	.ELBOW,TUBE OIL OUTLET AND OIL INLET HOSES,MARINE GEAR,1/2 IN CCC	EA	4
46	4A	PAOZZ	4730-00-230-2971	72582	5130294	.ELBOW,OIL DRAIN 45 DEG.....CUA,CUB,CUC	EA	2
46	5	PAOZZ	4730-00-277-4377	72582	120142	.ELBOW,TUBE OIL OUTLET AND OIL INLET HOSES,MARINE GEAR,3/8IN.	EA	4
46	6	XBOZZ		72582	144603	.NIPPLE,PIPE OIL OUTLET ELBOW,MARINE GEAR,3/8 X 3 IN.....	EA	2
46	7	XDOZZ	4730-00-837-0816	72582	144606	.NIPPLE,PIPE OIL INLET ELBOW MARINE GEAR,3/8 X 1 1/2 IN.....	EA	2
46	8	PAOZZ	4730-00-921-5387	72582	5186841	.CLAMP,OIL COOLER WATER INLET,1 9/16 - 2 1/2 IN.DIA.....	EA	4
46	9	XBOZZ		72582	5185887	.HOSE,OIL COOLER WATER INLET,1 7/8 X 1 1/2 IN.....	EA	2
46	10	PAOZZ	5306-00-225-8500	96906	MS90725-35	.BOLT,MACHINE OIL COOLER HOUSING TO BLOCK,5/16-18 X 1 1/8 IN. LG.....	EA	2
46	11	PAOZZ	5306-00-150-1837	72582	186274	.BOLT,MACHINE OIL COOLER HOUSING TO BLOCK,5/16-18 X 5 IN.LG..	EA	2
46	12	PAOZZ	5310-00-407-9566	96906	MS35338-45	.WASHER,LOCK OIL COOLER HOUSING BOLT MTG,5/16 IN.....	EA	2
						FIGURE 47 NOT APPLICABLE		

by
62
94
80
94
21
55
64
96
86
71

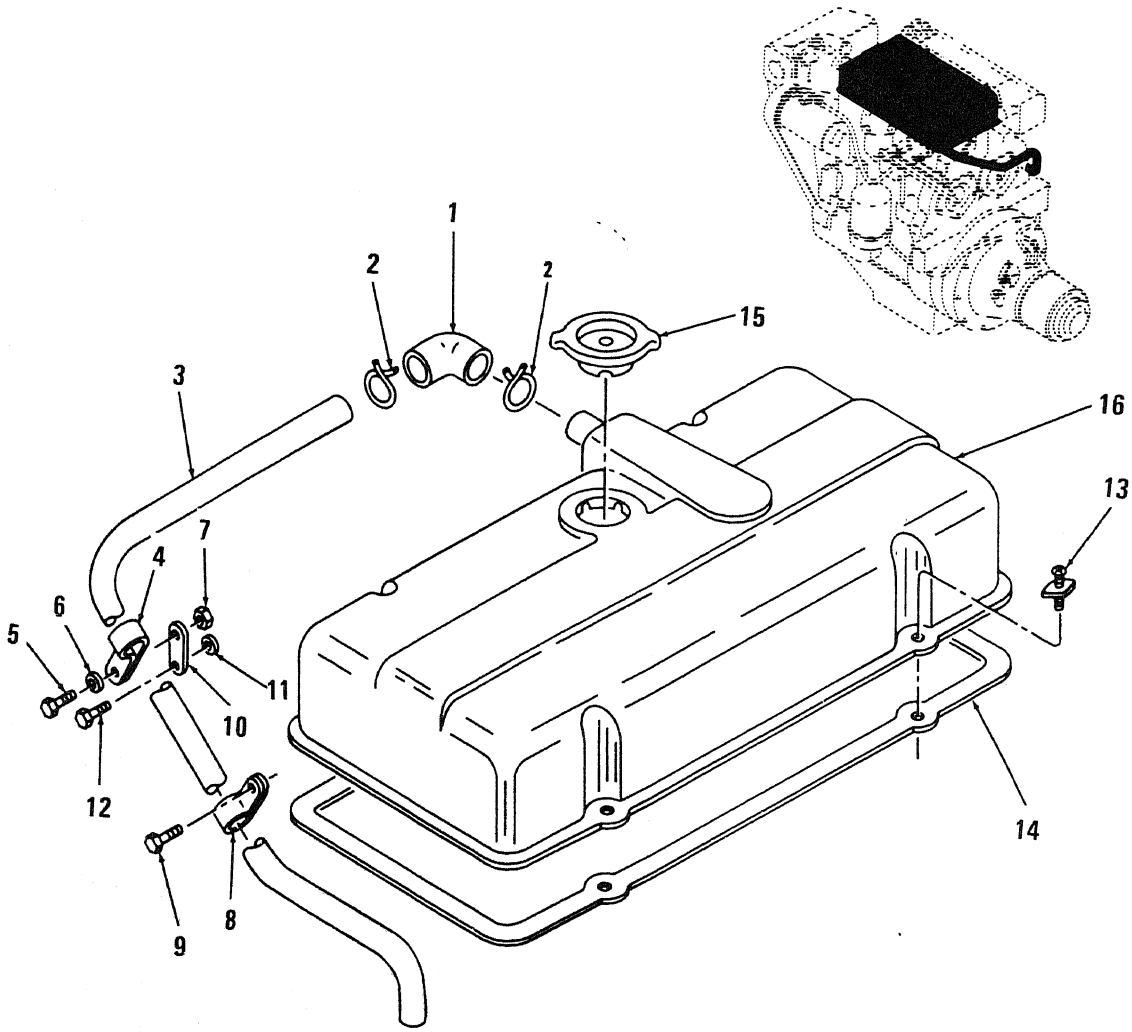

Figure 48. Valve Rocker Cover

(1) ILLUSTRATION (a) FIG. NO.	(b) ITEM NO.	(2) SMR CODE	(3) NATIONAL STOCK NUMBER	(4) FSCM	(5) PART NUMBER	(6) DESCRIPTION USABLE ON CODE	(7) U/M	(8) QTY INC IN UNIT
48	1	PAOZZ	4720-00-902-1549	72582	5130140	.HOSE,VENT,ROCKER COVER.....	EA	2
48	2	PAOZZ	4730-00-922-2015	72582	272857	.CLAMP,HOSE.....	EA	4
48	3	XBOZZ		72582	5130442	.PIPE,EXTENSION BREATHER,1 IN.OD X 41 IN.LG.....	EA	2
48	4	XBOZZ	5340-00-061-2184	72582	5183247	.CLAMP,LOOP ROCKER COVER,1 IN.PIPE.....	EA	2
48	5	PAOZZ	5305-00-269-3209	96906	MS90725-58	.BOLT,MACHINE BREATHER PIPE CLIP MTG,3/8-16 X 3/4 IN.LG.....	EA	2
48	6	PAOZZ	5310-00-637-9541	96906	MS35338-46	.WASHER,LOCK BREATHER PIPE MTG BOLT,3/8 IN.....	EA	2
48	7	PAOZZ	5310-00-732-0558	96906	MS51967-8	.NUT,PLAIN, HEXAGON BREATHER PIPE MTG BOLT,3/8-16 IN.....	EA	2
48	8	PAOZZ	5340-00-001-4996	72582	5161874	.CLIP,TUBE ROCKER COVER,1-1 1/16 IN.DIA.....	EA	2
48	9	PAOZZ	5305-00-269-3209	96906	MS90725-58	.BOLT,MACHINE BREATHER PIPE CLIP MTG,3/8-24 X 3-9 1/16 IN.LG..	EA	2
48	10	XBOZZ		72582	5173189	.BRACKET,BREATHER CLIP.....	EA	2
48	11	XBOZZ		24617	5164789	.SPACER BREATHER CLIP MTG,13/32 ID X 7/8 IN.....	EA	2
48	12	PAOZZ	5305-00-269-2819	96906	MS90726-75	.BOLT,MACHINE BREATHER PIPE BRACKET MTG,3/8-24 X 4 1/4 IN.LG..	EA	2
48	13	PAOZZ	2815-00-074-1929	72582	5100104	.CLAMP AND SCREW,ROCKER COVER MTG.....	EA	8
48	14	PAOZZ	5330-00-792-9026	72582	5119457	.GASKET,ROCKER COVER.....	EA	2
48	15	PAOZZ	2815-00-042-6545	78225	AAI3253	.CAP ASSEMBLY OIL FILLER ROCKER COVER.....	EA	2
48	16	XBOZZ		72582	5128372	.COVER ASSEMBLY,ROCKER ARM WITH FILLER BREATHER.....	EA	2

FIGURES 49 THRU 60 NOT APPLICABLE

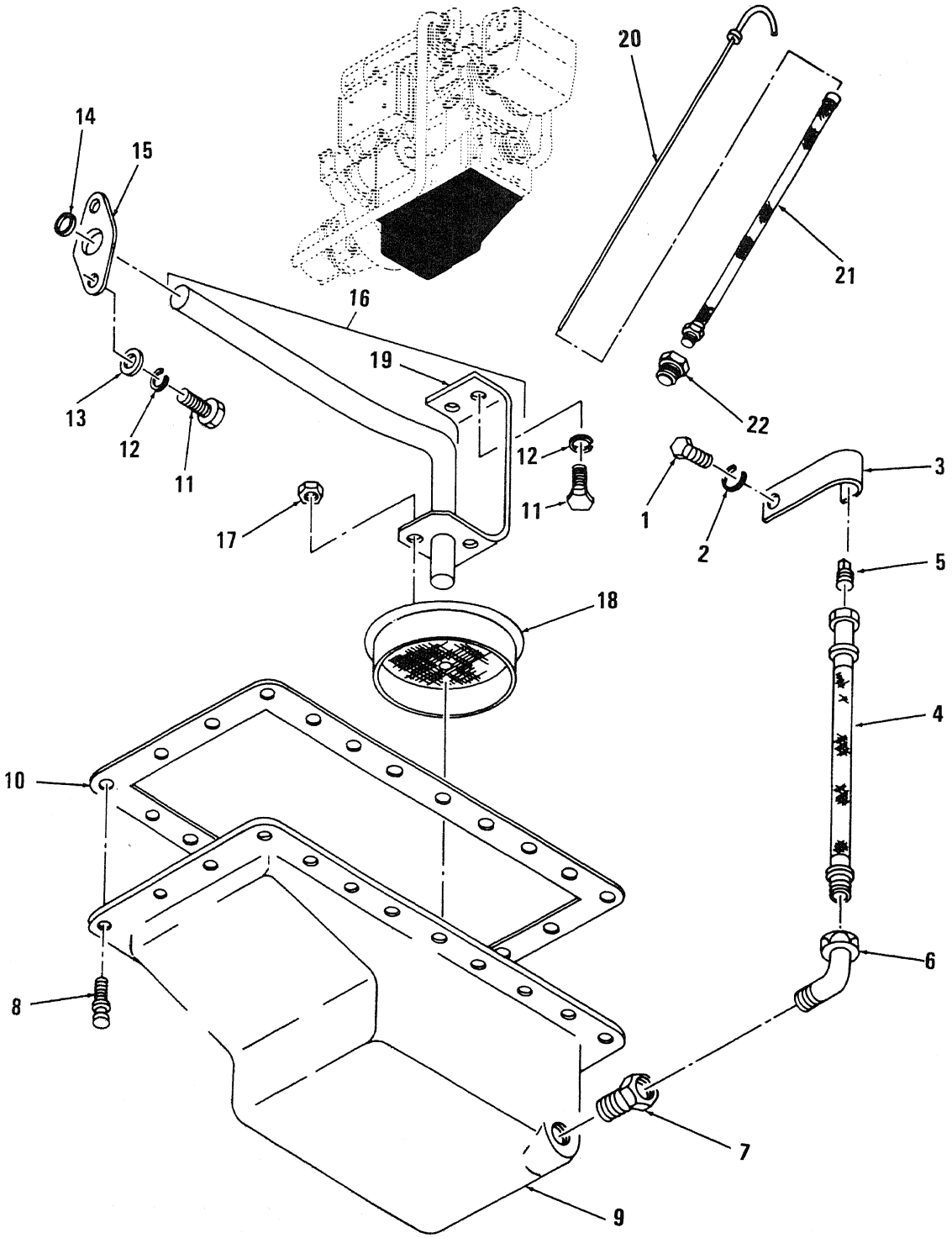

Figure 61. Oil Pan, Inlet Pipe, Screen and Dipstick

(1) ILLUSTRATION (a) FIG NO	(b) ITEM NO	(2) SMR CODE	(3) NATIONAL STOCK NUMBER	(4) FSCM	(5) PART NUMBER	(6) DESCRIPTION USABLE ON CODE	(7) U/M	(8) QTY INC IN UNIT
61	20	PAOZZ	6680-00-231-0786	72582	5109255	.GAGE ROD-CAP,LIQUID.....	EA	3
61	21	XBOZZ	4730-00-424-4019	72582	5121062	.GUIDE,DIP STICK.....	EA	2
61	22	XBOZZ		72582	5109774	.ADAPTER ASSEMBLY.....	EA	2

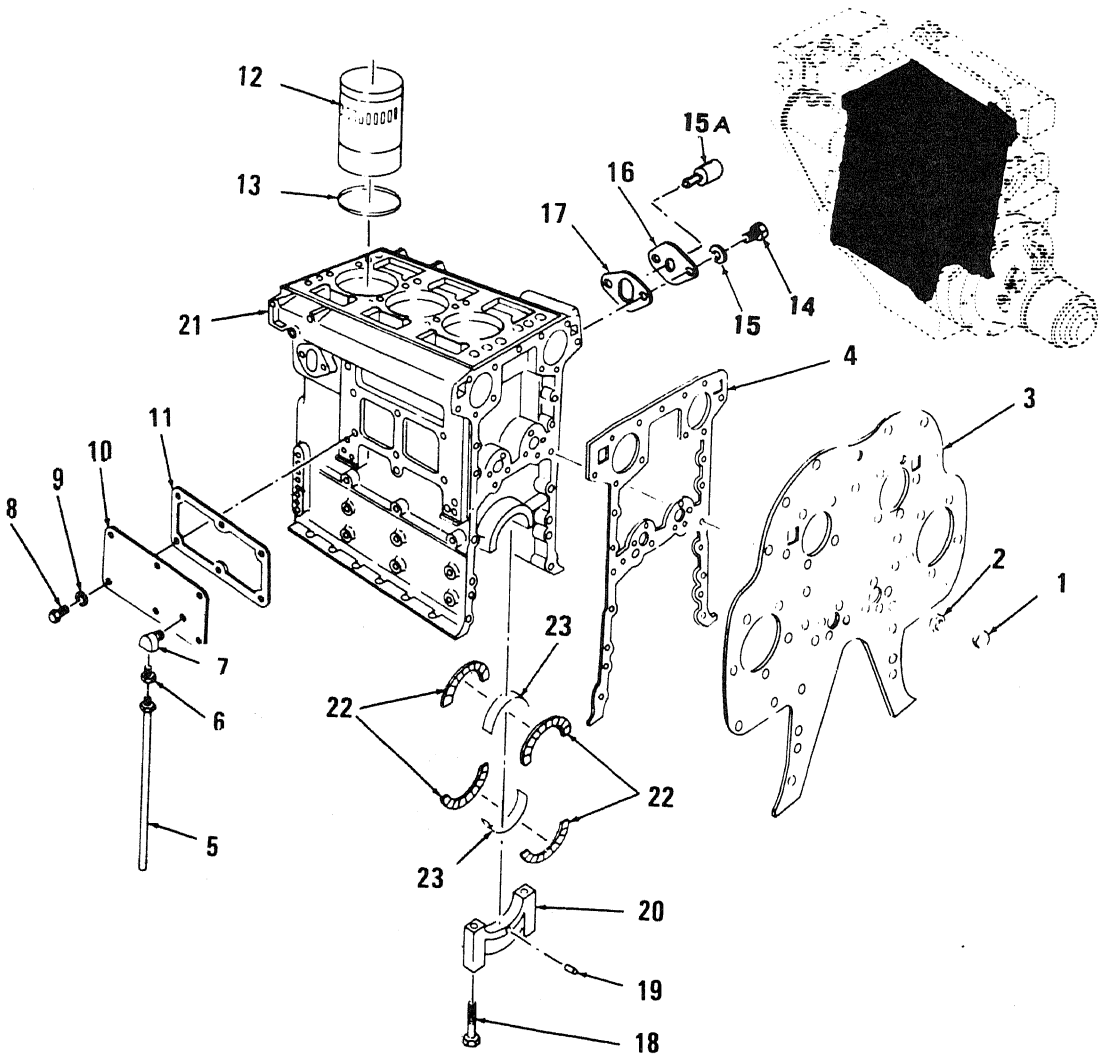

Figure 62. Cylinder Block

SECTION II

(1) ILLUSTRATION (a) FIG NO.	(b) ITEM NO.	(2) SMR CODE	(3) NATIONAL STOCK NUMBER	(4) FSCM	(5) PART NUMBER	(6) DESCRIPTION USABLE ON CODE	(7) U/M	(8) QTY INC IN UNIT
62	15A	PAOZZ		72582	5146080	.SWITCH WATER TEMP SENSOR.....	EA	1